HYXI

User Manual

HIGH VOLTAGE STACKABLE BATTERY

BAT-QS5



Carefully read this user manual before using the product.
Read and save these instructions.

© ZHEJIANG HYXI TECHNOLOGY CO., LTD. All rights reserved.

This document cannot be copied fully or partially, transferred, or distributed in any form without the prior written permission of ZHEJIANG HYXI TECHNOLOGY CO., LTD (hereinafter referred to as "HYXI").

TRADEMARKS

and other HYXI trademarks are the trademarks or registered trademarks of HYXI All other trademarks mentioned herein are the properties of their respective owners.

Contents

About the Manual 1
Overview 1
Scope of Application 1
For Readers 1
Use of the Manual 1
Use of Symbols 2
1 Safety Instructions 3
1.1 Symbols on the Label 4
1.2 Safety Precautions 4
1.3 Response to Emergency Situations 6
1.4 Personnel Requirements 7
2 Inspection & Unpacking 8
2.1 Inspection 8
2.2 Packing List 8
2.2.1 Packing List of Battery Pack 8
2.2.2 Packing List of BC 8
2.2.3 Packing List of BCP (Optional) 9
3 Pre-Installation Preparation 10
3.1 Installation Tools Requirement 10
3.2 Location and Environmental Requirement 10
3.2.1 Installation Angle 11
3.2.2 Installation Position 11
3.2.3 Installation Space 11
4 Product Overview 12
4.1 Dimensions 12
4.1.1 Dimension of Pack 12
4.1.2 Dimension of BC (Single System) 12
4.1.3 Dimension of BCP (Parallel System) 12
4.1.4 Dimensions of the System 13
4.2 Product Appearance 14
4.2.1 Appearance of Pack 14
4.2.2 Appearance of BC (Single System) 15
4.2.3 Appearance of BCP (Parallel System) 16
4.2.4 Parallel System Connection Diagram 17
5 Mechanical Installation 19

6 Electrical Connection 25
6.1 Grounding Connection 25
6.2 Communication Interfaces 26
6.2.1 COM1 26
6.2.2 COM2 26
6.3 Battery and COM Connection 27
6.3.1 Single System 27
6.3.2 Parallel System 28
7 LED Indicator 31
7.1 LED Display and System Status 31
7.2 SOC Indicators & Battery Capacity 32
8 System Commissioning 33
8.1 System Startup 33
8.2 System Shutdown 34
9 Online monitoring 35
10 Maintenance and Troubleshooting 35
10.1 Routine Maintenance 35
10.2 Troubleshooting 36
10.2.1 General Troubleshooting 36
10.2.2 Alarm Description 36
11 Appendix 38
11.1 Technical Parameter 38
11.2 Contact Information 39

About the Manual

Overview

To ensure the proper installation and use of the product and its superior performance, before installation and operation of the product, please read the operating instructions in detail and follow all safety precautions in the instructions.

Scope of Application

This manual is intended for the following device:

- BAT-QS5-BC-L1
- BAT-QS5-BC-L2
- BAT-QS5-BC-L3
- BAT-QS5-BC-L4
- BAT-QS5-BC-L5
- BAT-QS5-BC-L6
- BAT-QS5-BC-L7
- BAT-QS5-BC-L8
- BAT-QS5-BC-L9
- BAT-QS5-BC-L10
- BAT-QS5-BC-L11
- BAT-QS5-BC-L12

Item	Description
BAT	Battery
QS5	QS series 5kWh stackable battery pack
BC	Battery controller
L1~L12	The number of stackable battery pack in one battery tower

For Readers

This manual is intended for professional technicians who need to install, operate and maintain the product and for users who need to check the product parameters.

All installation operations must be carried out by professional technicians and only by professional technicians.

Use of the Manual

Please read the manual carefully before using the product, the content of the manual will be updated and corrected, but it is inevitable that there is a slight discrepancy or error with the actual product. Users should refer to the actual product purchased and obtain the latest version of the manual by downloading from www.hyxipower.com or through sales channels.

Use of Symbols

To ensure user safety and property protection during product use, relevant information is provided and highlighted with the following symbols.

⚠ DANGER

- Indicates a high potential hazard that, if not avoided, could result in death or serious injury.

⚠ WARNING

- Indicates a moderate potential hazard that could result in death or serious injury if not avoided.

⚠ CAUTION

- Indicates a low potential hazard which, if not avoided, could result in moderate or minor injury.

NOTICE

- Indicates a potential risk which, if not avoided, could result in the equipment not functioning properly or in property damage.

1 Safety Instructions

HYXI energy storage high voltage can provide a variety of operating modes according to different needs, self-generation, peak-shaving, battery priority, etc.

For safety, all operations including transportation, storage, installation, usage and maintenance must comply with applicable laws, regulations, standards and specifications. Incorrect operation or use will endanger:

- Life and personal safety of operators or third parties.
- Other property of the operators or third parties.

HYXI is not responsible in the event of any of the following:

- It does not operate in the conditions of use described in this manual.
- The installation and use environment do not comply with the provisions of the relevant international or national or regional standards.
- Unauthorized disassembly, modification of the product or modification of the software code.
- Failure to follow the operating instructions and safety warnings in the product and documentation.
- Equipment damage caused by abnormal natural environment (force majeure, such as earthquake, fire, windstorm, flood, mudslide, etc.).
- Damage to equipment caused by abnormal natural environment (force majeure, such as earthquake, fire, storm, flood, mudslide, etc.)
- Transportation damage caused by the customer's own transportation.
- Damage caused by storage conditions that do not meet the requirements of the product documentation.
- Damage to the hardware or data of the equipment due to customer negligence, improper operation or intentional damage.
- Damage to the system caused by a third party or the customer, including damage caused by handling and installation that does not meet the requirements of this manual, and damage caused by adjustments, alterations, or removal of identification marks that do not meet the requirements of this manual.

1.1 Symbols on the Label

Symbol	Description
	Risk of danger! There are potential hazards when the equipment is in operation, please take precautions when operating the equipment.
	Beware of electric shock! High voltage exists when the equipment is in operation, so when operating the equipment, make sure the equipment is powered off.
	Keep away from open flames or sources of ignition.
	Do not dispose of the product together with the household waste.
	Please use the equipment reasonably, extreme conditions of use, the equipment has the risk of explosion.
	Observe enclosed documentation.
	Wear protective gloves.
	CE certification mark. The inverter complies with the regulations of CE.

1.2 Safety Precautions

NOTICE

- When installing, operating and maintaining the equipment, please read this manual and follow all safety precautions marked on the equipment and in the manual.

NOTICE

- The "NOTICE", "CAUTION", "WARNING" and "DANGER" items in this manual do not represent all safety items to be observed. They are in addition to all safety precautions. HYXiPOWER shall not be liable for any violation of the general safety requirements or for any violation of the safety standards for the design, manufacture and use of the equipment.
- The operation of transportation, turnover, installation, wiring and maintenance shall meet the laws, regulations and related standards of the country and region where it is located.
- The user's own materials and tools required for operation must meet the laws and regulations and related standards of the country or region where they are located.
- Permission must be obtained from the power department of the country or region in which the system is located before it can be connected to the grid.

⚠ CAUTION

- The equipment should be used in an environment that conforms to the design specifications; otherwise, equipment failure may result, and the resulting abnormal functioning of the equipment or damage to components, personal safety accidents, and property damage are not covered by the equipment warranty.
- Local laws, regulations and codes should be observed when installing, operating and maintaining the equipment. The safety precautions in the manual are intended only as a supplement to local laws and regulations and norms.
- Lifting or lowering the system carries the risk of injury. The battery is heavy. There is a risk of injury if the battery is not lifted or dropped properly during transport or during installation or removal. Two or more people must lift and transport the battery.
- You should be fully familiar with the composition and working principle of the whole grid- connected photovoltaic power generation system and the relevant standards of the country/ region where the project is located.
- Reverse engineering, decompiling, disassembling, adapting, implanting or other derivative operations of the equipment software are prohibited. It is not allowed to study the internal implementation of the equipment, obtain the source code of the equipment software, steal intellectual property rights, etc. in any way, nor shall the results of any equipment software performance test be disclosed.

⚠ DANGER

Risks of Explosion:

- Do not subject the battery module to heavy impacts;
- Do not crush or puncture the battery module;
- Do not dispose of the battery module in a fire.

⚠ DANGER

Risks of Fire:

- Do not expose the battery module to temperature exceeding 140° F (6° C);
- Do not place the battery module near a heat source, such as a fireplace;
- Do not expose the battery module to direct sunlight;
- Do not allow the battery connectors to touch conductive objects such as wires.

⚠ DANGER

Risks of Electric Shock:

- Do not disassemble the battery module;
- Do not touch the battery module with wet hands;
- Do not expose the battery module to moisture or liquids;
- Keep the battery module away from children and animals.

⚠ DANGER

Risks of Damage to The Battery Module:

- Do not expose the battery module to liquids;
- Do not subject the battery module to high pressures;
- Do not place any objects on top of the battery module;
- It shall be protected from the sun and rain.

1.3 Response to Emergency Situations

Leaking batteries:

In case the leakage of electrolyte solution occurs, please avoid direct contact with the electrolyte solution and the gas that may be generated by it. Direct contact may lead to skin irritation or chemical burns. If the user comes into contact with the electrolyte solution, please do as follows:

Situation	Response
Accidental inhalation of harmful substances	Evacuate from the contaminated area, and seek medical attention immediately.
Eye contact	Rinse eyes with flowing water for 15 minutes, and seek medical attention immediately.
Dermal contact	Wash the affected area thoroughly with soap and water, and seek medical attention immediately.
Ingestion	Induce vomiting, and seek medical attention immediately.

Fire:

Please keep a Class ABC fire extinguisher or a carbon dioxide extinguisher near the equipment.



If a fire breaks out where the battery module is installed, please do as follows:

- Extinguish the fire before the battery module catches fire;
- If the battery module catches fire, please do not try to put out the fire, and evacuate immediately.

Wet batteries and damaged batteries:

- Do not touch the battery module after being wet from and soaked in the water.
- Do not use the battery module if it is damaged. Otherwise, the loss to life and property will be caused.
- Please pack the battery in its original packaging, and return it to our company or the distributor.

1.4 Personnel Requirements

⚠ CAUTION

- Personnel responsible for the installation and maintenance of HYXiPOWER equipment must first be strictly trained to understand various safety precautions and master the correct operation methods.
- Only qualified professionals or trained personnel are allowed to install, operate and maintain the equipment.
- Only qualified professionals are allowed to remove safety facilities and overhaul equipment.
- Personnel who operate the equipment, including operators, trained personnel, and professionals should have the local state required special operating qualifications, such as high voltage operation, ascent, and special equipment operation qualifications.
- Replacement of equipment or parts (including software) must be done by professionals or authorized personnel.

Professional personnel:

- People who have training or experience in operating equipment and can clearly understand the various potential sources and magnitudes of hazards during equipment installation, operation, and maintenance.

Trained personnel:

- A person who has received the appropriate technical training and has the necessary experience to be aware of the hazards that may be presented to him when performing a particular operation and to take measures to minimize the hazards to himself or to other personnel.

2 Inspection & Unpacking

2.1 Inspection

The equipment has been completely tested and strictly inspected before leaving the factory, but it may still be damaged during transportation, please make a detailed inspection before signing the product.

- Check whether there is any damage to the packing box.
- Check if the goods are complete and in accordance with the packing list.
- Unpack and check if the equipment inside is intact.

If there is any damage or incomplete goods, please contact with the shipping company or directly with Zhejiang Hyxi Technology Co., Ltd.

Provide photos of the damage to facilitate the provision of services.

2.2 Packing List

2.2.1 Packing List of Battery Pack

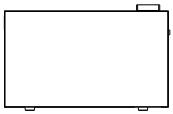
Pack × 1

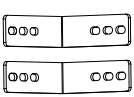
Bracket × 2

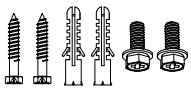
ST 5*60 screw × 2
M8*38 expansion tube × 2
M5*10 screw × 2

2.2.2 Packing List of BC

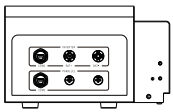
Battery controller × 1

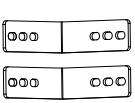
Bracket × 2

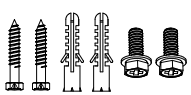
ST 5*60 screw × 2
M8*38 expansion tube × 2
M5*10 screw × 2


RJ45 waterproof terminal × 1


Negative battery cable (1.2m) × 1
Wire gauge: 10AWG

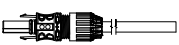
Positive battery cable (1.2m) × 1
Wire gauge: 10AWG

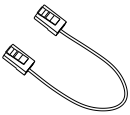
Communication cable (2m) × 1

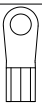
OT terminal × 1
Compatible wire cross-section:12~10AWG


M4*8 screw × 1

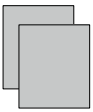
Document

2.2.3 Packing List of BCP (Optional)

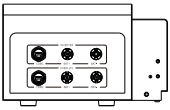
Parallel battery controller × 1 (optional)

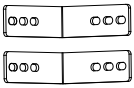
Bracket × 2

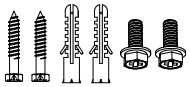
ST 5*60 screw × 2
M8*38 expansion tube × 2
M5*10 screw × 2


RJ45 waterproof terminal × 1


Negative battery connector × 2


Positive battery connector × 2

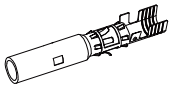
Positive battery pin contact × 2

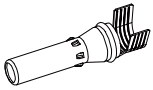
Negative battery pin contact × 2


M4*8 screw × 1

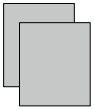
Document

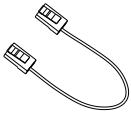
Communication cable (2m) × 1

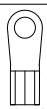
OT terminal × 1
Compatible wire cross-section:12~10AWG

3 Pre-Installation Preparation

3.1 Installation Tools Requirement

Installation tools include, but are not limited to, the following recommended tools. And if necessary, other auxiliary tools can be used on site.

The following tools are not included in this package. Please make sure they are ready before installation and electrical connections.

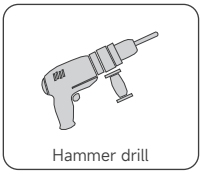
Hammer drill

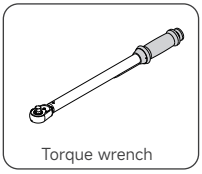
Torque wrench

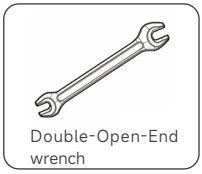
Double-Open-End wrench

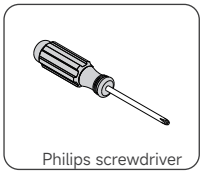
Philips screwdriver

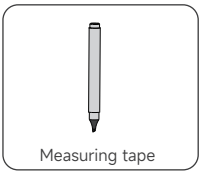
Measuring tape

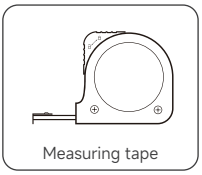
Measuring tape

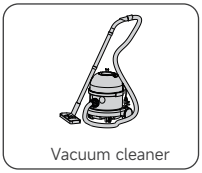
Vacuum cleaner

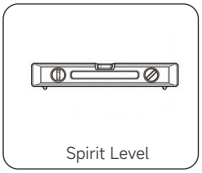
Spirit Level

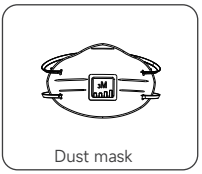
Dust mask

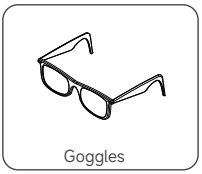
Goggles


Insulated shoes


Protective gloves

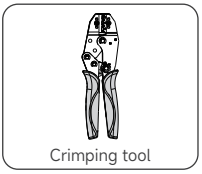
Crimping tool

3.2 Location and Environmental Requirement

- The battery enclosure has an IP65 protection rating and could be installed indoors and outdoors.
- The battery has no ventilation requirements.
- The battery housing should be installed in a location free from the risk of water (standing water, submersion, etc.). The installation location must be well drained.
- The product needs to be installed on a level surface.

The following places are not allowed to be installed:

- In environments where the temperature is less than -20°C or more than 50°C .
- Places where humidity and condensation exceed 95%.
- Places where salt and humid air can penetrate.
- Flooded areas.
- Earthquake areas - additional safety measures are required here.
- Locations at altitudes above 3000 meters.
- Explosive atmospheres.
- Locations with prolonged exposure to sunlight.
- Places where the ambient temperature changes drastically.
- Humid rooms.
- Locations with highly flammable materials or gases.
- Locations with a potentially explosive atmosphere.

3.2.1 Installation Angle

Do not tilt the product forward, horizontal, upside down, backward and sideways installation.

3.2.2 Installation Position

The installation position should meet the load-bearing requirements of the equipment, and the installation is located should have fire retardant properties.

3.2.3 Installation Space

When installing this product, make sure there is no other equipment (except for the installation of necessary equipment, masking devices) and flammable and explosive materials around, and reserve sufficient installation space as shown in the following figure to ensure installation, heat dissipation, safety and other needs.

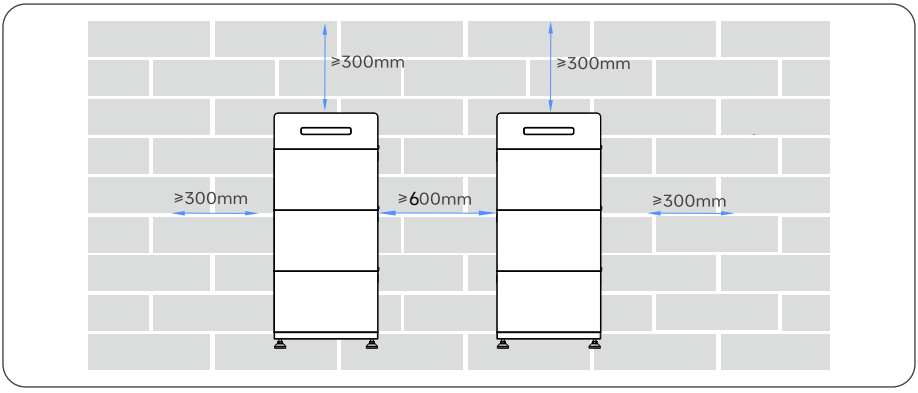

4 Product Overview

4.1 Dimensions

4.1.1 Dimension of Pack

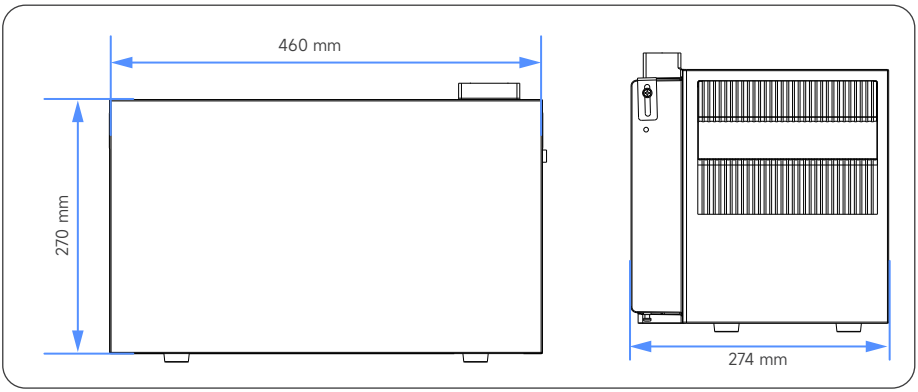

4.1.2 Dimension of BC (Single System)

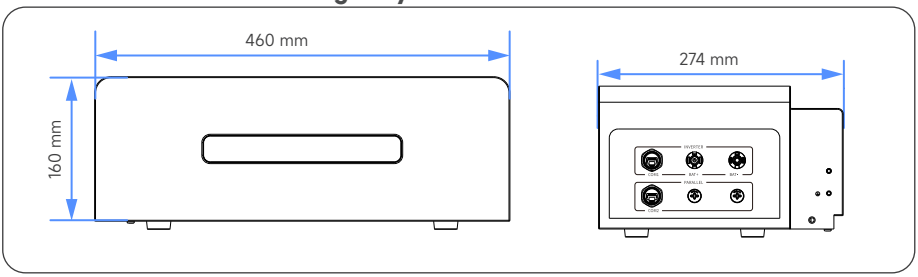

4.1.3 Dimension of BCP (Parallel System)

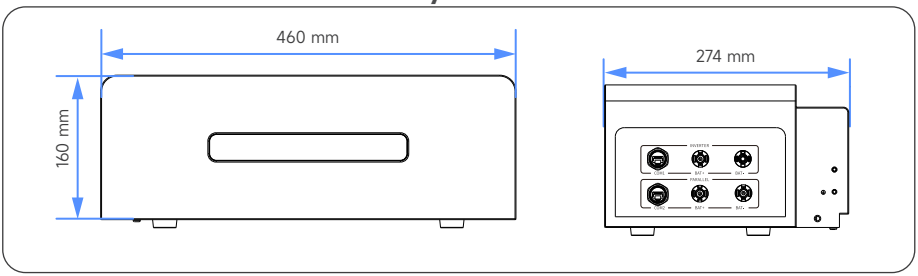

4.1.4 Dimensions of the System

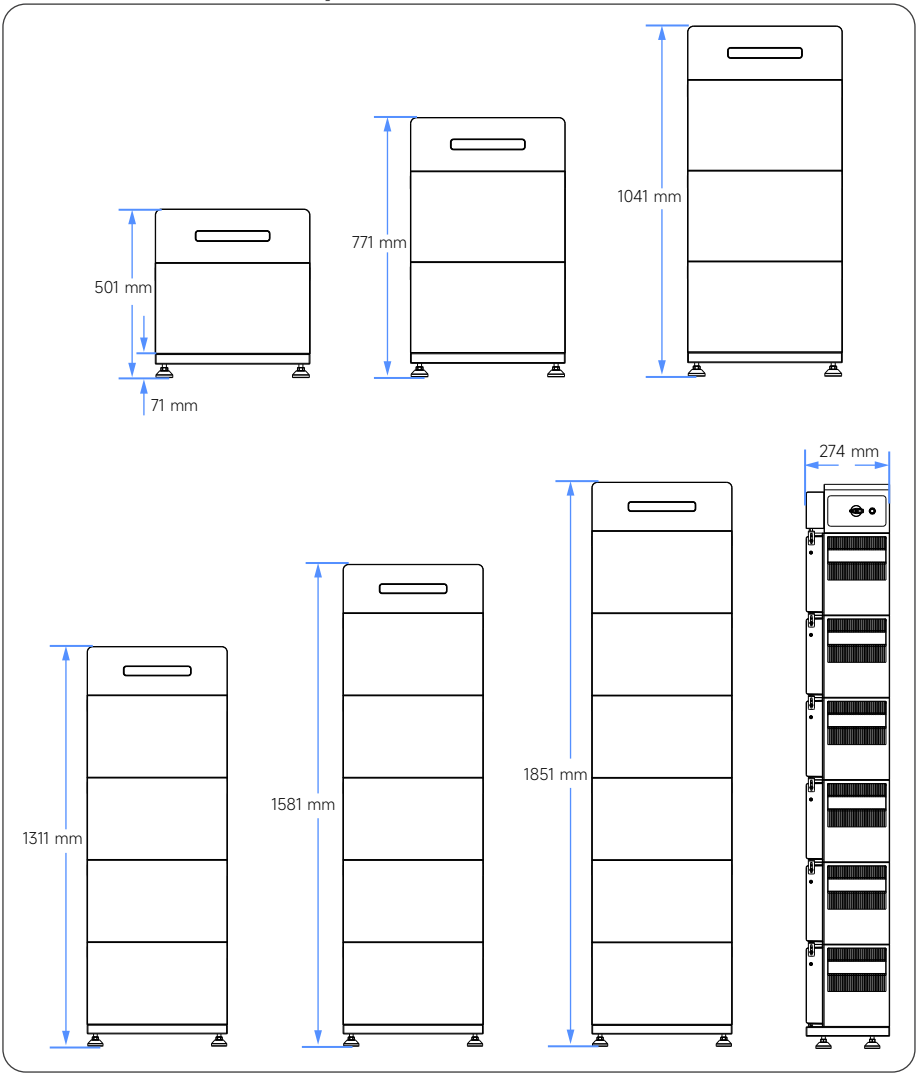

4.2 Product Appearance

4.2.1 Appearance of Pack

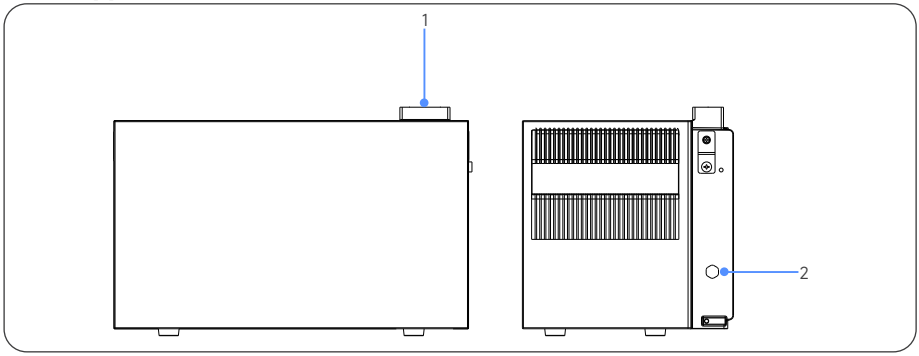

No.	Item	Description
1	Battery pack terminal / BC terminal	Connecting to battery pack or battery controller
2	Vent valve	/

4.2.2 Appearance of BC (Single System)

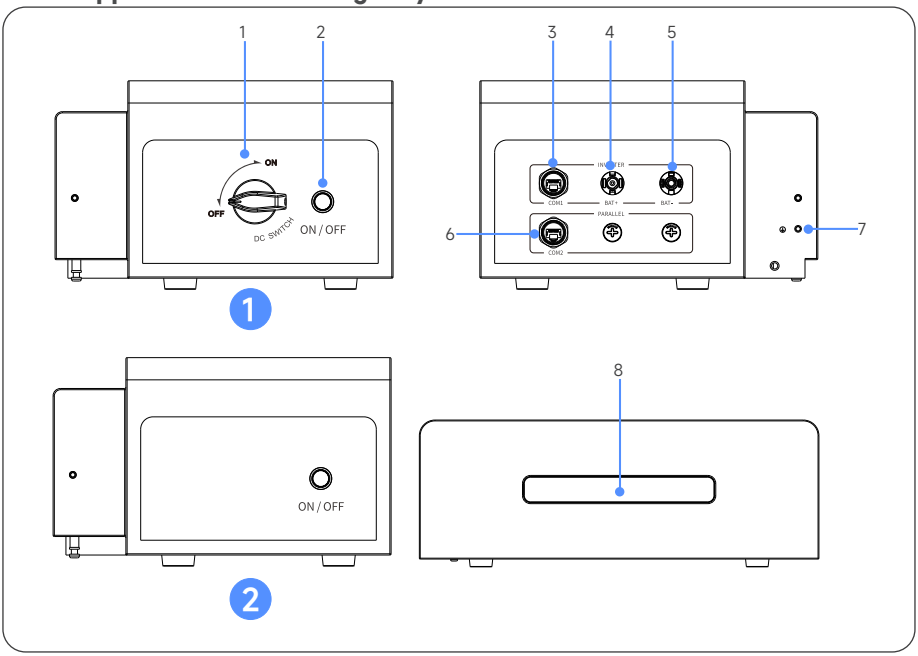

No.	Item	Description
1	DC switch	Turn on/off the power supply of the battery (The version for certain countries or regions does not have the DC switch, as shown in version 2)
2	ON/OFF	Power on/off the system
3	COM1	Communication with the inverter
4	BAT+	Connecting to battery terminal of inverter or BCP
5	BAT-	
6	COM2	Auxiliary communication port for host computer troubleshooting & parameter checking
7	Grounding point	Connecting to PE cable
8	LED panel	Display the status of the system and the SOC range

4.2.3 Appearance of BCP (Parallel System)

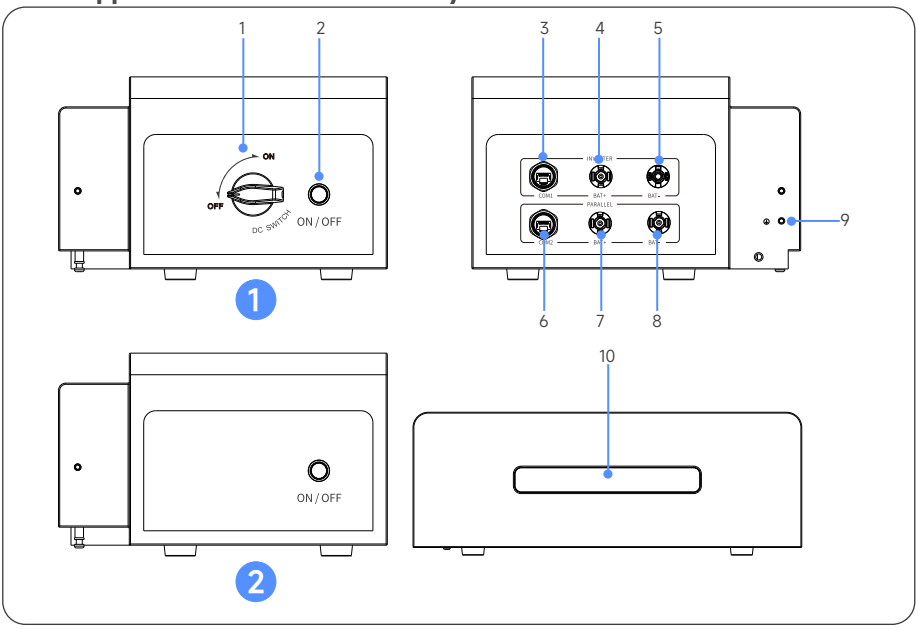

No.	Item	Description
1	DC switch	Turn on/off the power supply of battery (The version for certain countries or regions does not have the DC switch, as shown in version 2)
2	ON/OFF	Power on/off the system
3	COM1	Communication with the inverter
4	BAT+	Connecting to battery terminal of inverter
5	BAT-	
6	COM2	Communication with the BC
7	BAT+	Connecting to battery terminal of BC
8	BAT-	
9	Grounding point	Connecting to PE cable
10	LED panel	Display the status of the system and the SOC range

4.2.4 Parallel System Connection Diagram

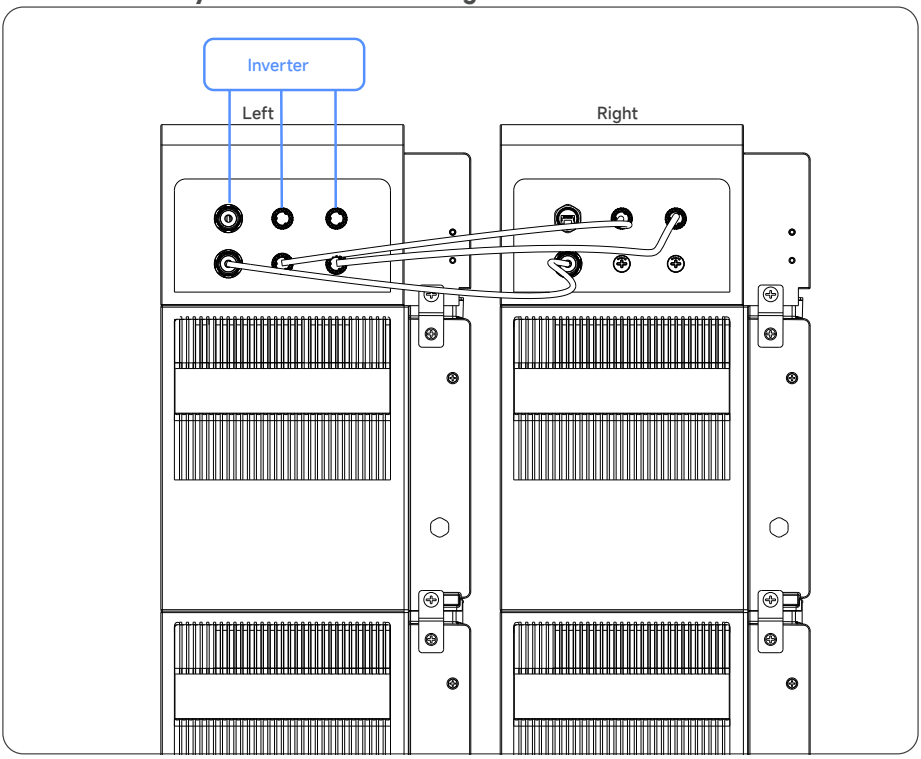

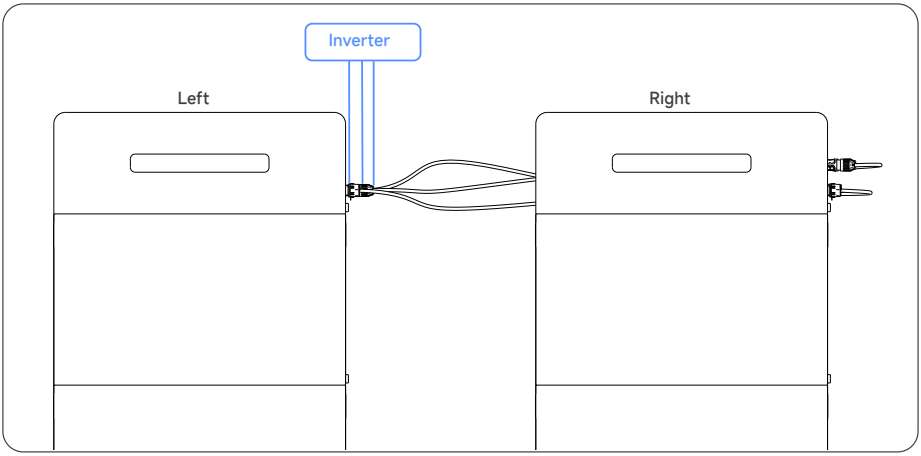

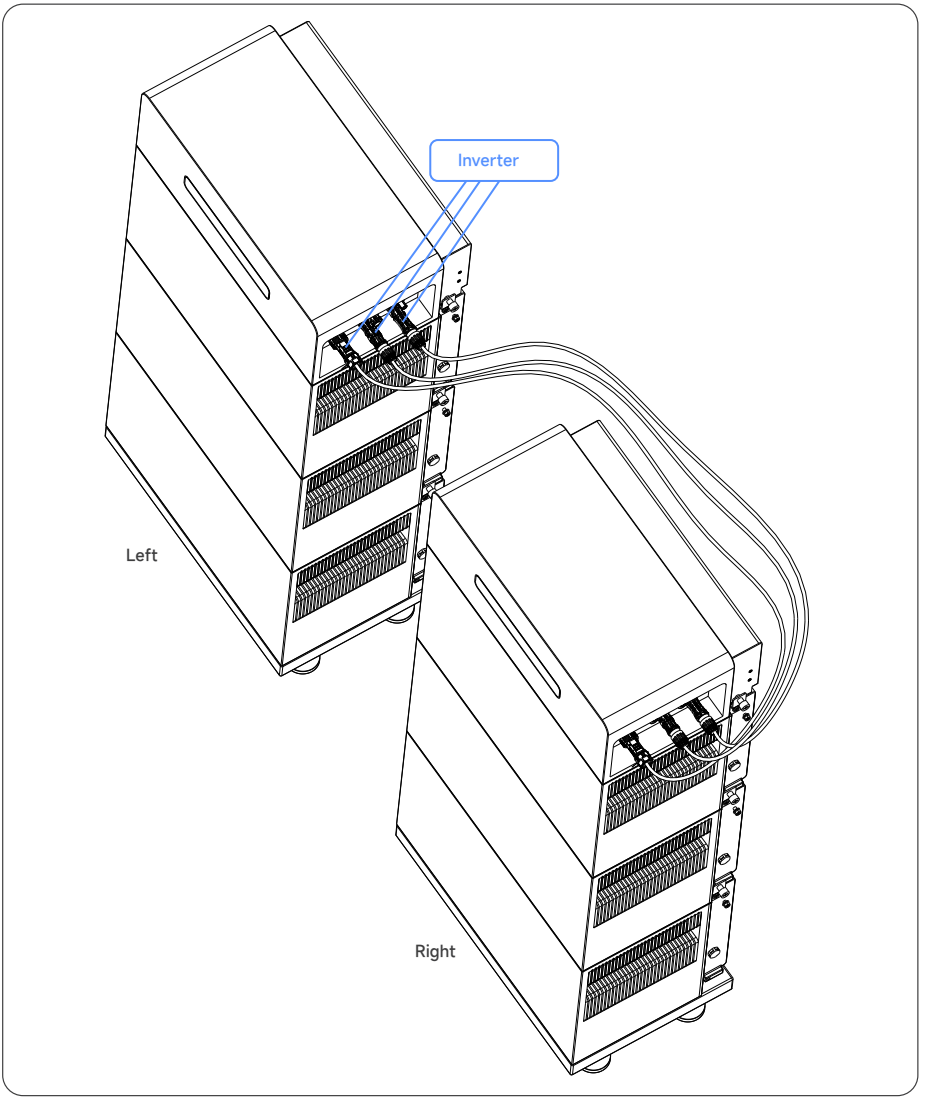
Inverter
Left
Right

5 Mechanical Installation

NOTICE

- The battery is heavy. There is a risk of injury if the battery is not lifted or dropped properly during transportation or during installation or removal.
- Two or more people must lift and transport the battery.
- When wiring the battery, it must be well protected, one person should wire and one person should supervise and check to prevent the battery short circuit accident.
- The installer should wear protective equipment.

NOTICE

- The base is an optional accessory.
- If the base is selected, perform Step 1 and Step 2 to place and level the base.
- If you do not select the base , skip Step 1 and Step 2 and proceed directly to Step 3.

Step 1: Take the base from the packaging, then place it on the ground.

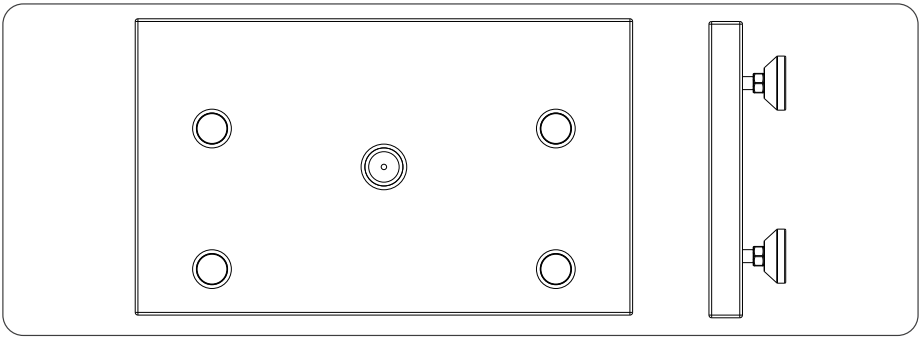

Step 2: The base is equipped with a built-in level and adjustable feet. Rotate the adjustable feet to modify the base height and center the spirit level bubble. The distance between the base and the wall is about 33mm.

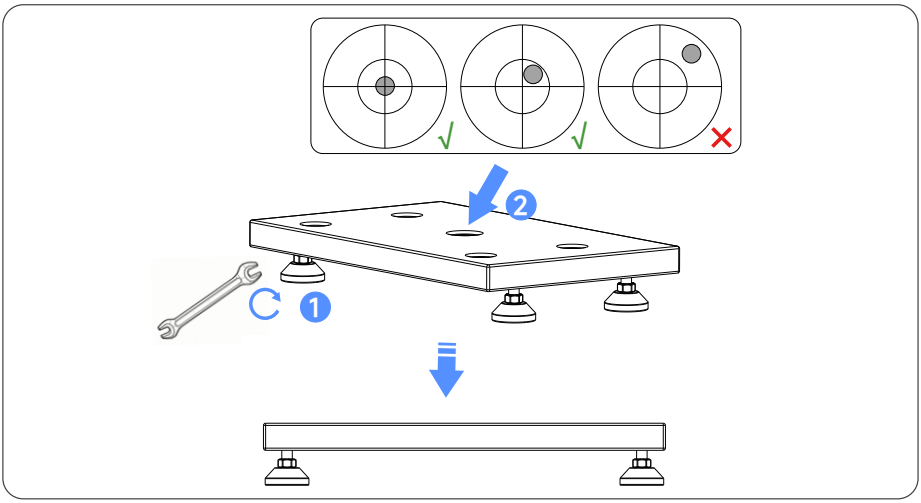

Step 3: Take the battery pack from the packaging, and remove the waterproof covers from the battery pack.

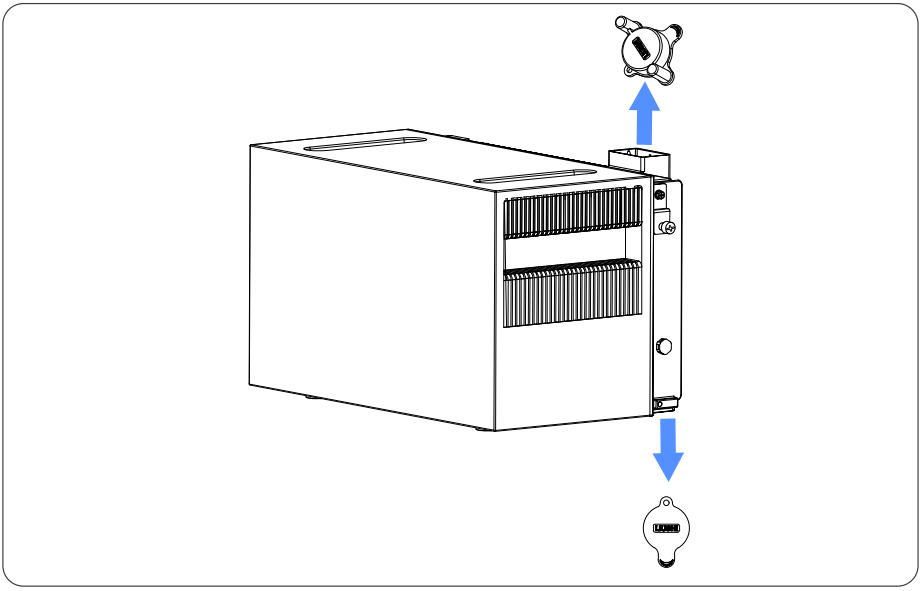

Step 4: Place your hands on the handles of the pack, and then mount the pack on the base. When all packs are installed, mount the BC/BCP on top of the packs.

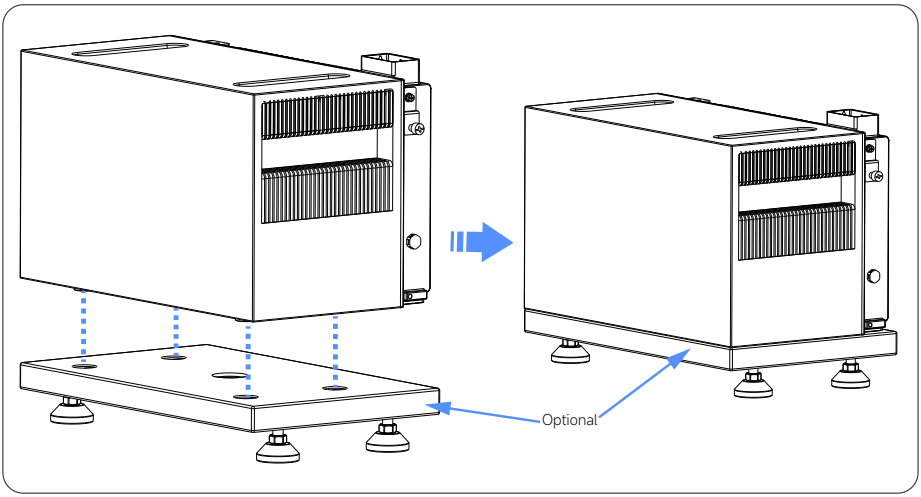

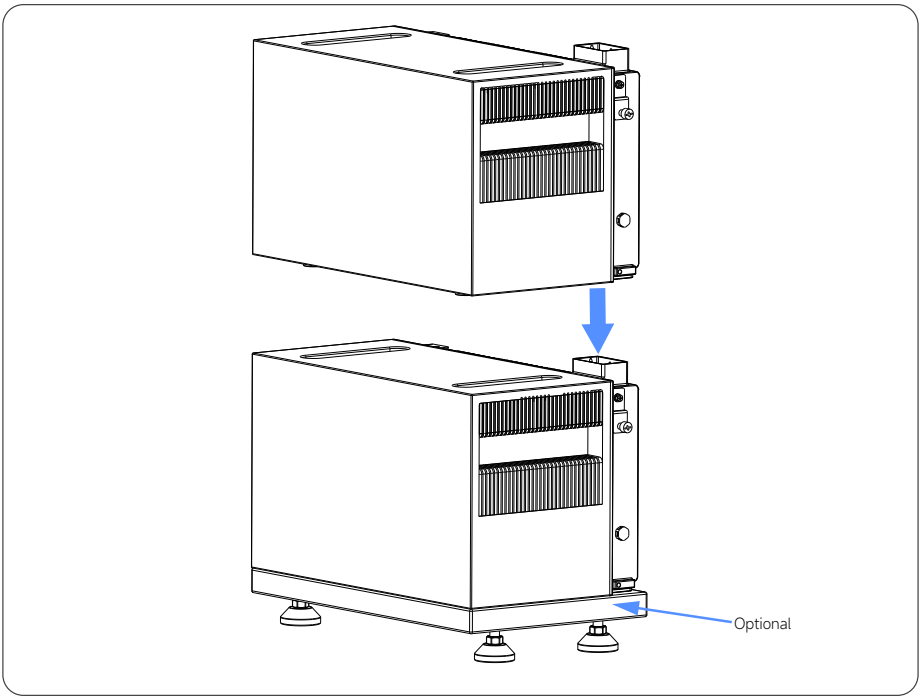

Step 5: The packs and BC/BCP are connected by brackets. Connecting the right brackets: Rotate the bracket, slightly loosen the secured M5 screw, and then secure the M5 screw to connect the packs/BC/BCP (Torque: 2.0-2.5N.m). Connecting the left brackets: Rotate the bracket to fit the bracket's clip onto the screw on the packs/BC/BCP. Repeat the above steps until all packs and BC/BCP are connected.

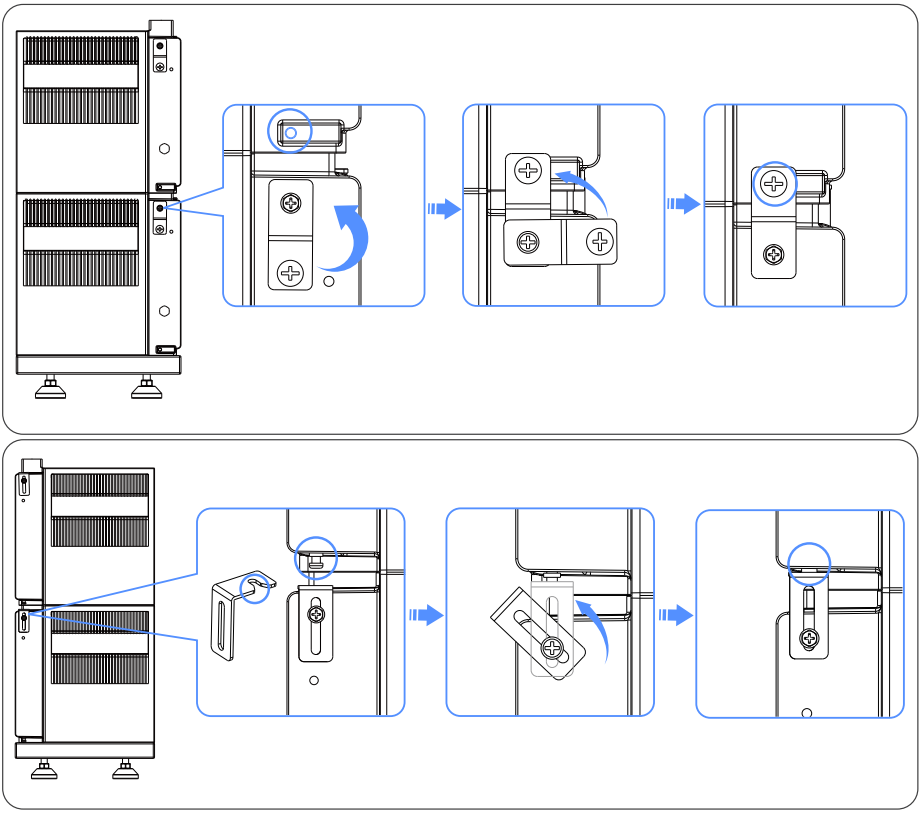

Step 6: Mount the system to the wall: Attach the L-shape wall mounting bracket to both sides of the battery packs/BC/BCP.

» 1. Install one side of the L-shape wall mounting bracket on the battery pack, and pre-lock but not tighten the M5*10 screw.
» 2. Mark holes on the wall.
» 3. Rotate the bracket down.
» 4. Use a hammer drill to drill holes in the wall to a depth of 60 mm. (∅ 8 drill bit)
» 5. Insert the expansion tubes.
» 6. Rotate the bracket back up.
» 7. Tighten the self-tapping screws.
» 8. Tighten the M5*10 screws. (Torque: 2.0-2.5N.m)

⚠ DANGER

- Before drilling, please make sure to avoid the pre-buried utility lines in the wall to avoid danger.
- To prevent dust from entering human respiratory tract or eyes when punching holes, personnel should wear appropriate protective gear.

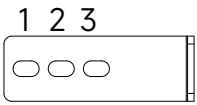

OB Hole Mounting Distance Range		
Position of the OB hole	Minimum distance from the wall	Maximum distance from the wall
1	46.5 mm	50.5 mm
2	33.0 mm	37.0 mm
3	19.5 mm	23.5 mm

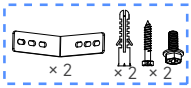



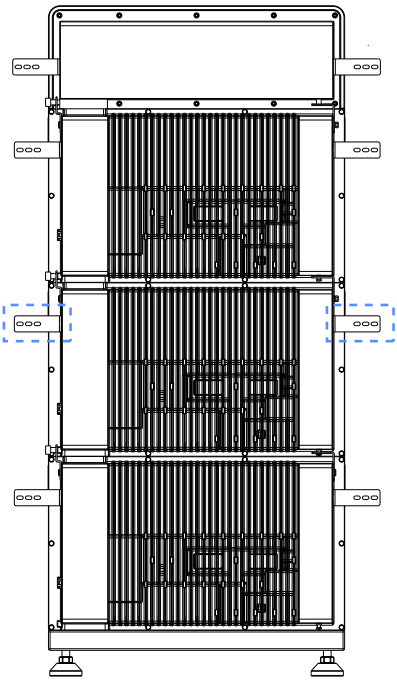

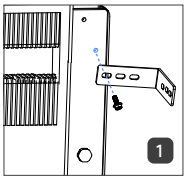

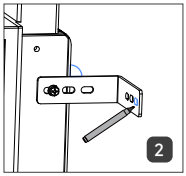

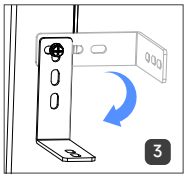

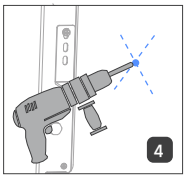

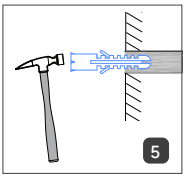

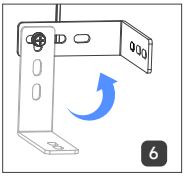

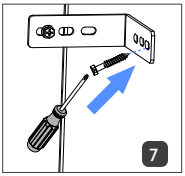

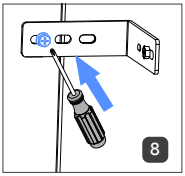

6 Electrical Connection

6.1 Grounding Connection

Step 1: Strip the insulation layer of the grounding cable.

Step 2: Insert the OT terminal into the grounding cable.

Step 3: Use a crimping tool to crimp the OT terminal.

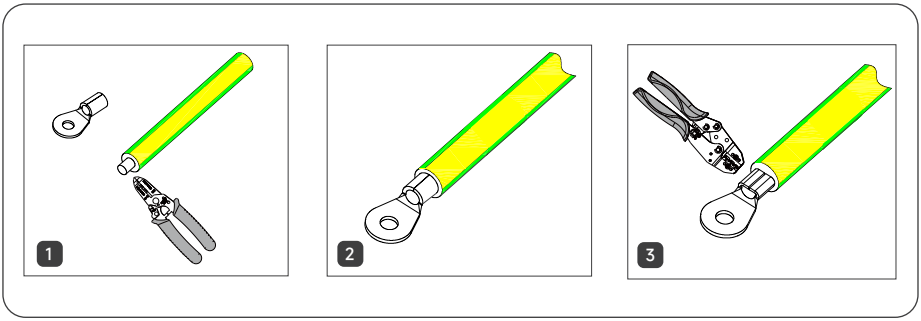

Step 4: Use M4*8 screw to secure the PE cable. (Torque: 1.5±0.1 N.m)

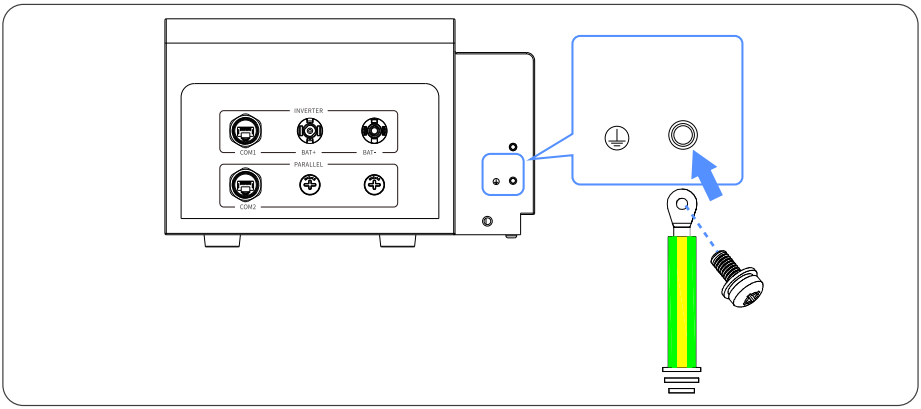

NOTICE

- The grounding connection steps for single system and parallel system are identical; the single system is used as an example here.

6.2 Communication Interfaces

6.2.1 COM1

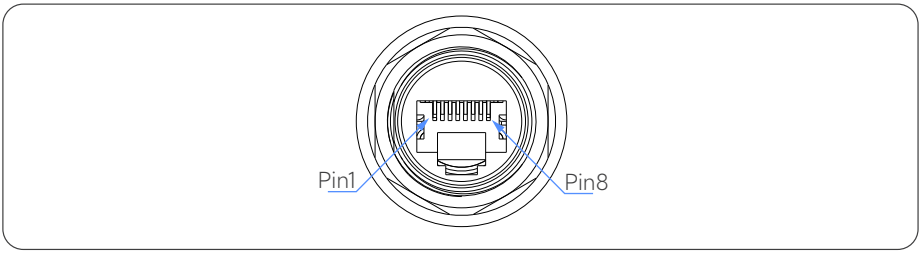

Pin	Item	Description
1	/	/
2	/	/
3	/	/
4	CAN1H	Communication with inverter
5	CAN1L	Communication with inverter
6	/	/
7	RS485A	RS485 Interface A for debugging
8	RS485B	RS485 Interface B for debugging

6.2.2 COM2

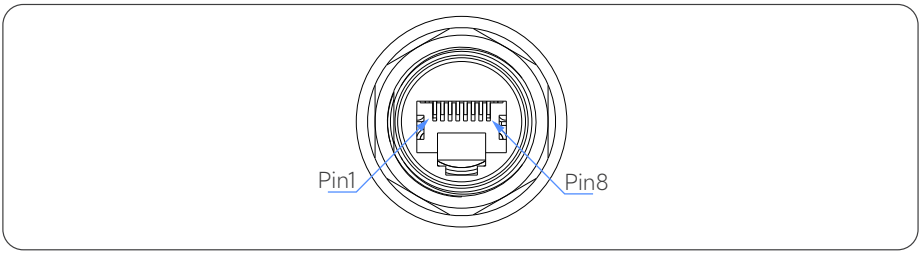

Pin	Item	Description
1	Wake-up1	Wake-up button signal 1
2	Wake-up2	Wake-up button signal 2
3	/	/
4	CAN2H	Communication with inverter
5	CAN2L	Communication with inverter
6	/	/
7	RS485A	RS485 Interface A for debugging
8	RS485B	RS485 Interface B for debugging

6.3 Battery and COM Connection

6.3.1 Single System

Wiring Diagram

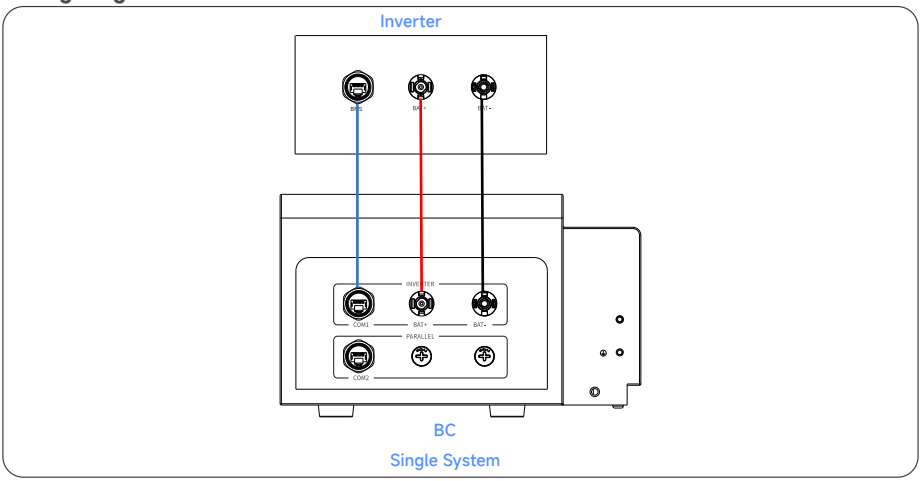

Battery and COM Connection Steps

Step 1: Assembling the COM cable: Take the RJ45 waterproof terminal and the communication cable from the packaging, then thread the communication cable through the RJ45 waterproof terminal, and then tighten the swivel nut.

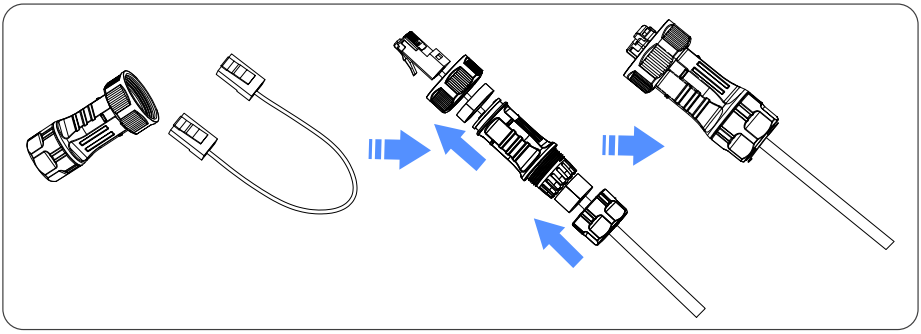

Step 2: Connecting the Battery and COM cable: Connect one end of the assembled COM cable to the inverter's BMS port, and the other end to the COM1 port of the BC.
Then take the negative and positive battery cable from the packaging, connect them to the BAT+ BAT- port of the inverter and the BAT+ BAT- port of the BC. Make sure the battery polarity is correct.

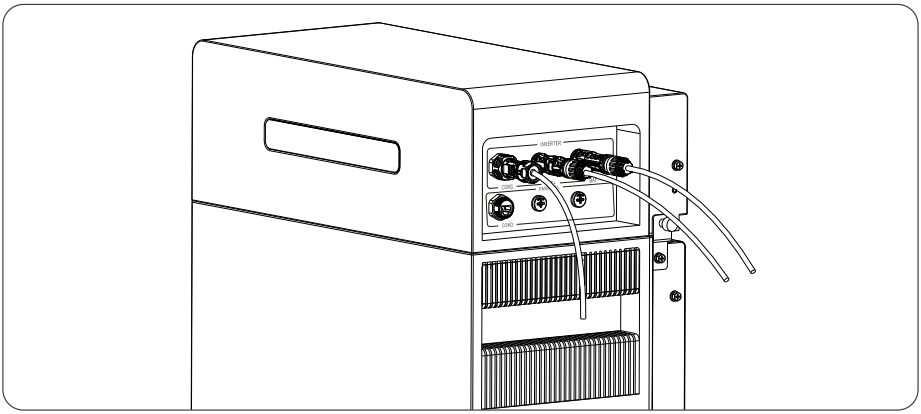

NOTICE

- The other end of the COM cable is not connected. Using the terminal provided with the inverter to connect the other end. During installation, ensure that the length of the input/output cables and communication cable for this device is less than 3 meters.

6.3.2 Parallel System

Wiring Diagram

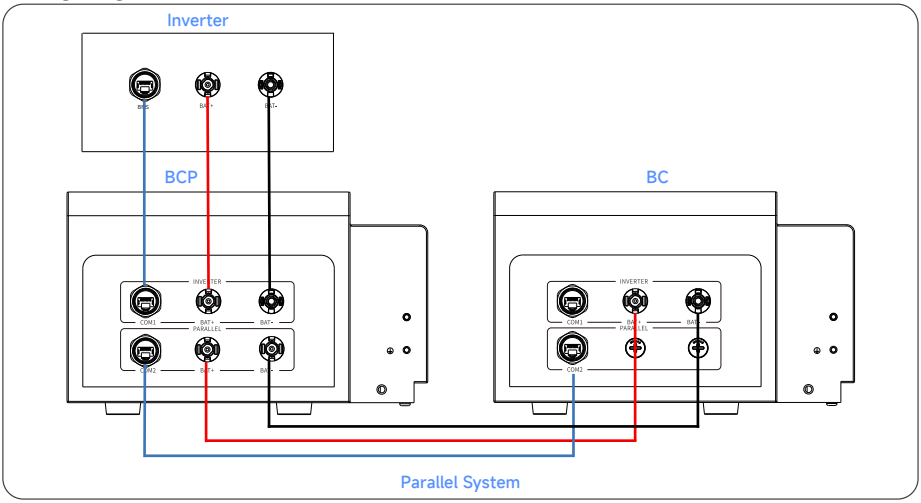

Battery and COM Connection Steps

Step 1: Assembling the COM cable: Take the RJ45 waterproof terminal and the communication cable from the packaging, then thread the communication cable through the RJ45 waterproof terminal, and then tighten the swivel nut.

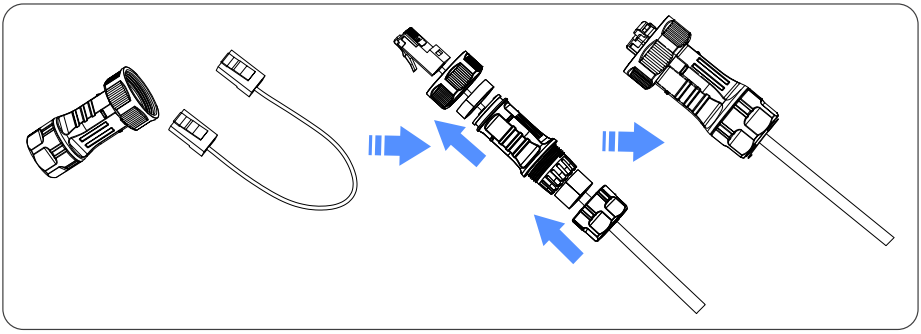

Step 2: Connecting the COM cable: Connect one end of the assembled COM1 cable to the inverter's BMS port, and the other end to the COM1 port of the BC and connect the COM2 cable between the two BC.

NOTICE

- The other end of the COM cables are not connected. Using the terminals provided with the inverter to connect the other end. During installation, ensure that the length of the input/output cables and communication cables for this device is less than 3 meters.

Step 3: Connecting battery cables:

» For battery connection between BC and Inverter, take the negative and positive battery cable from the packaging, connect the upper BAT+ BAT- port of the BC to the BAT+ BAT- port of the Inverter. Make sure the battery polarity is correct.

» **For battery connection between BC and BCP, crimping and assembling battery cables are needed. For detailed information, please refer to** "Crimping and Assembling Battery Cables". Make sure the battery polarity is correct.

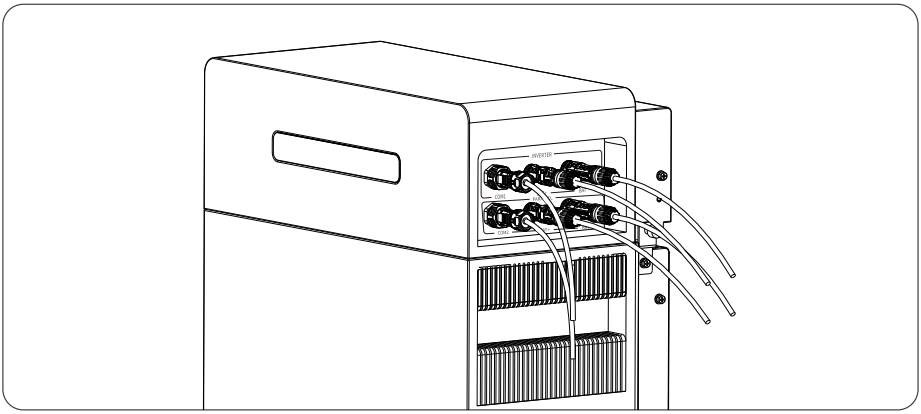

Crimping and Assembling Battery Cables

Step 1: Strip the insulation layer of the battery cables.

Step 2: Insert the stripped cables into the battery pin contacts.

Step 3: Crimp the connection parts with a crimping tool.

Step 4: Thread the battery cables through the battery connectors.

Step 5: Then tighten the swivel nuts.

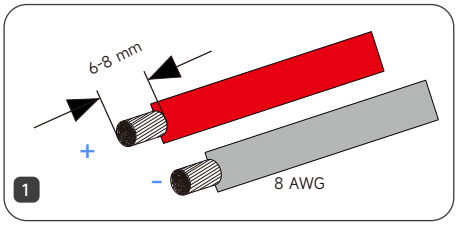

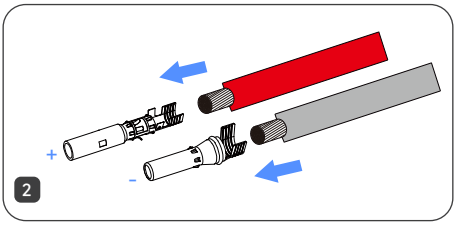

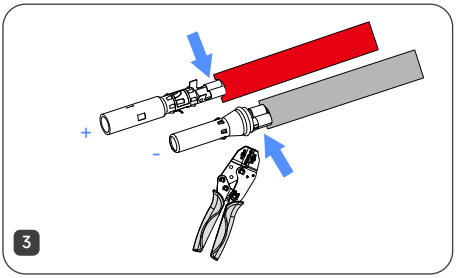

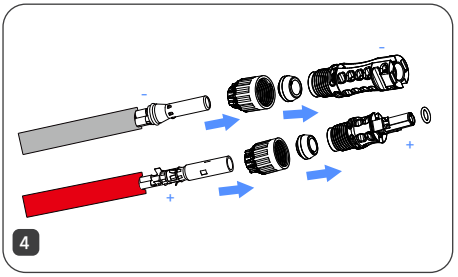

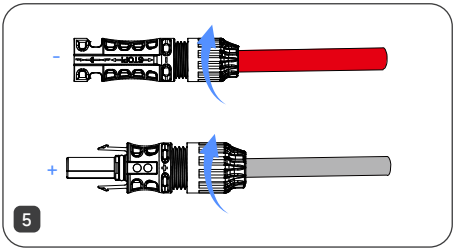

7 LED Indicator

7.1 LED Display and System Status

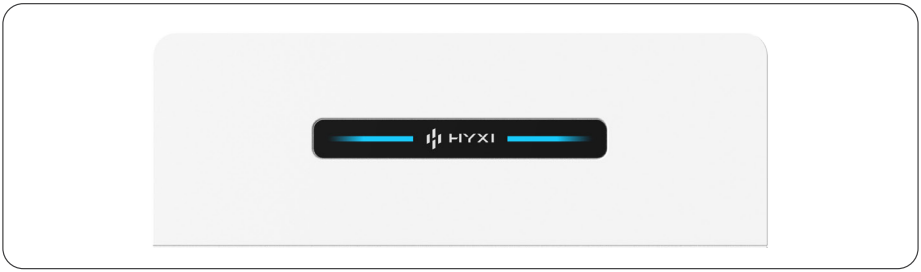

Function	Operation	LED Indication
Power-on	Press and hold the ON/OFF button for 2s	The LED strip sweeps from left to right once, then remains lit to display the current SOC value.
10s encoding process after power on	/	The LED strip runs white breathing light for 10 seconds.
Power-off	Press and hold the ON/OFF button for 5s	The LED strip sweeps from right to left once, then turns off fully.
Remote battery firmware upgrade	Triggered via APP or cloud platform	The LED strip shows blue breathing light.
Battery self-test	Tap the self-test button on APP / cloud platform	The LED strip flashes blue: 0.5s ON, 0.5s OFF.
First level alarm	/	The LED strip flashes orange: 0.5s ON, 0.5s OFF
Other level alarm	/	The LED strip flashes yellow: 0.5s ON, 0.5s OFF
Check battery SOC during fault flashing	Short press the On/OFF button under operating mode.	Displays SOC status for 3s, then the LED reverts to the fault flashing state automatically.
Standby mode	Set battery into standby state via APP / cloud platform	The LED strip shows white breathing light.

7.2 SOC Indicators & Battery Capacity

LED Indication	SOC	Charging	Discharging
	0% ≤ SOC<10%	Red light 1/10 of LED strip steady on	Red light 1/10 of LED strip flashes: On 0.5s, off 0.5s
	10% ≤ SOC<20%	Yellow light 2/10 of LED strip steady on	Yellow light 2/10 of LED strip flashes: On 0.5s, off 0.5s
	20% ≤ SOC<30%	Green light 3/10 of LED strip steady on	White light 3/10 of LED strip steady on
	30% ≤ SOC<40%	Green light 4/10 of LED strip steady on	White light 4/10 of LED strip steady on
	40% ≤ SOC<50%	Green light 5/10 of LED strip steady on	White light 5/10 of LED strip steady on
	50% ≤ SOC<60%	Green light 6/10 of LED strip steady on	White light 6/10 of LED strip steady on
	60% ≤ SOC<70%	Green light 7/10 of LED strip steady on	White light 7/10 of LED strip steady on
	70% ≤ SOC<80%	Green light 8/10 of LED strip steady on	White light 8/10 of LED strip steady on
	80% ≤ SOC<90%	Green light 9/10 of LED strip steady on	White light 9/10 of LED strip steady on
	90% ≤ SOC<100%	Green light Full LED strip steady on	White light Full LED strip steady on

8 System Commissioning

8.1 System Startup

Version 1

Turn on the DC switch, and then press and hold the ON/OFF button for 2s.

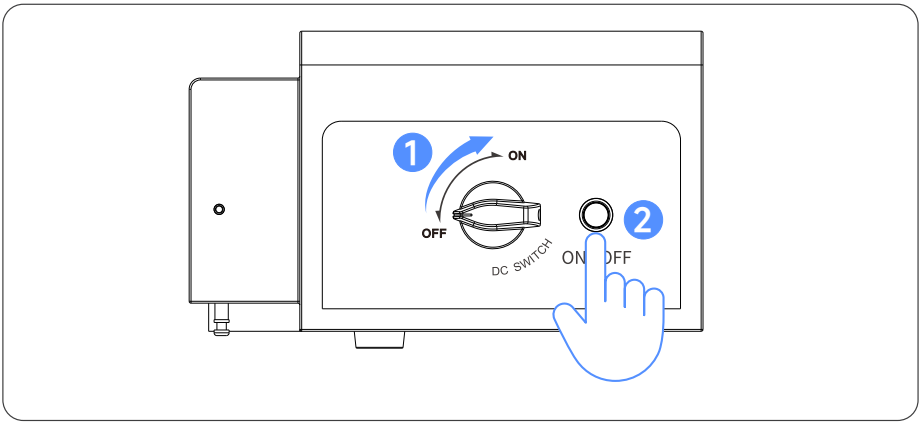

Version 2

Press and hold the ON/OFF button for 2s.

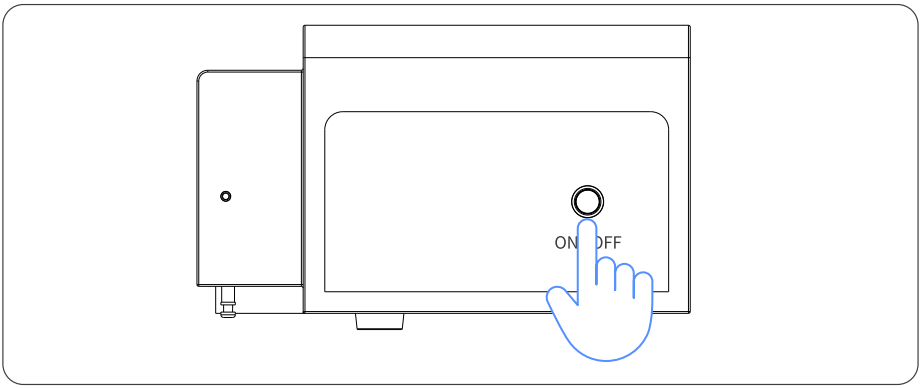

8.2 System Shutdown

Version 1

Press and hold the ON/OFF button for 5s, and then turn off the DC switch.

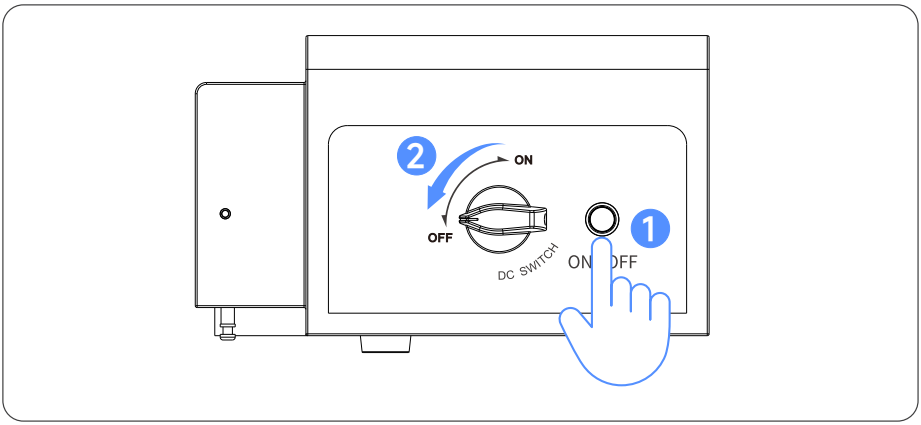

Version 2

Press and hold the ON/OFF button for 2s.

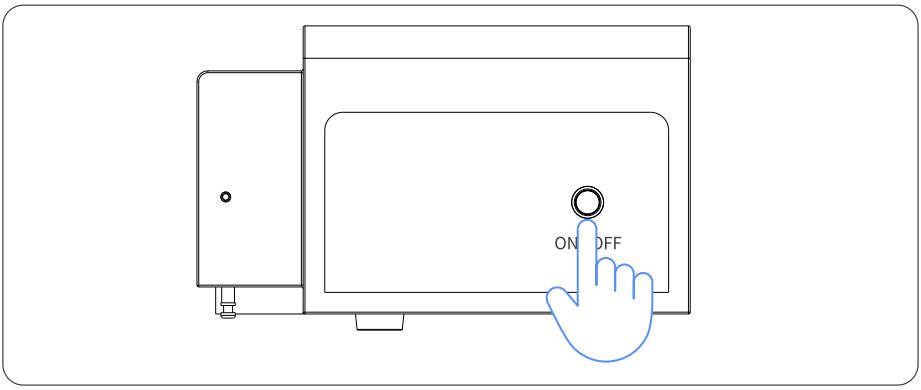

9 Online monitoring

All the battery data is uploaded to the inverter, and the monitoring is uploaded from the inverter side.

10 Maintenance and Trouble-shooting

10.1 Routine Maintenance

If the energy storage system is not used for more than three months, it is necessary to charge the energy storage battery to a full charge to avoid over-discharge due to self-consumption of the system.

The battery has a discharge depth of 90%, i.e. the system stops discharging when 10% of the power SOC remains. It is recommended to charge in time.

Product cleaning:

Step 1: First, gently wipe the surface with a soft microfiber cloth to remove dust or debris.

Step 2: Moisten the cloth with water (neutral detergent can also be added) and wring out excess water.

Step 3: Wipe away any debris or dirt.

Step 4: Finally, wipe off all water from the surface with a dry microfiber cloth.

⚠ CAUTION

- The cleaning process should be carried out away from electrical connections to prevent water from getting inside the product housing, connection ports, etc.
- Do not wipe the product with reagents other than water (H_2O).

10.2 Troubleshooting

10.2.1 General Troubleshooting

Battery communication failure:

- Failure analysis: CAN communication or 485 communication failure.
- Solution: Check if the communication line is in good contact.

Battery over-undervoltage fault:

- Failure analysis: Voltage range is not compatible with the battery and the battery energy is insufficient.
- Solution: Check the battery voltage, PV or whether it will be charged automatically when there is grid.

Overload fault:

- Failure analysis: The load is too large.
- Solution: Check whether the load exceeds the machine power, all down and then part of the load up.

Output short circuit fault:

- Failure analysis: There is a short circuit working condition on the load side.
- Solution: All power down, after the power indicator goes off, check whether the load is short-circuited, and then power up after troubleshooting.

10.2.2 Alarm Description

The following alarms are recoverable alarms, please refer to the following table to process and resume operation.

Fault name	Action	Recovery conditions
Battery discharge overcurrent	Prohibition of discharge/high voltage relay disconnection	• Turn off part of the load. • Reboot the device.
Battery charging overcurrent	Prohibition of charge/high voltage relay disconnection	• Restart the device. • Contact HYXI after-sales staff to solve.
Battery charging over-voltage	Prohibition of charge/ high voltage relay disconnection	• Restart the device. • Contact HYXI after-sales staff to solve the problem.
Battery discharge undervoltage	Prohibition of discharge/high voltage relay disconnection	• Restart the device. • Contact HYXI after-sales staff to solve the problem.
Battery discharge high temperature	Prohibition of discharge/high voltage relay disconnection	• Turn off the load of the equipment, and leave it until the battery temperature is less than 50°C . • Contact HYXI after-sales personnel to solve.
Battery charging high temperature	Prohibition of charge/high voltage relay disconnection	• Leave the battery temperature less than 50°C . • Contact HYXI after-sales personnel to solve.

Fault name	Action	Recovery conditions
Battery discharging low temperature	Prohibition of discharge/high voltage relay disconnection	• Leave to wait for the battery temperature is greater than -10°C . • Contact HYXI after-sales personnel to solve.
Excessive battery temperature difference	Prohibition of discharge and charge/high voltage relay disconnection	• Leave the battery temperature difference less than 12°C . • Contact HYXI after-sales personnel to solve.
Loss of communication with PCS	High Voltage Relay Disconnection	• Check the connection between BC/BCP and PCS harness. • Contact HYXI after-sales staff to solve the problem.
Battery pack communication lost	High Voltage Relay Disconnection	• Check the connection between BC/BCP and battery pack harness. • Contact HYXI after-sales staff to solve the problem.
Pack overtemperature	Prohibition of charging and discharging	• Leave to pack temperature less than 55°C . • Contact HYXI after-sales personnel to solve.
BMS self-test fault	Prohibit high voltage	• Restart the device. • Contact HYXI after-sales staff to solve the problem.
Cell voltage sampling line failure	Prohibit high voltage/Prohibit charging and discharging/ Disconnecting high voltage relay	• Restart the device. • Contact HYXI after-sales staff to solve the problem.

11 Appendix

11.1 Technical Parameter

Model	BAT-QS5-LN (N=1~10)	BAT-QS5-L11	BAT-QS5-L12
Battery Type		LFP (LiFePO4)	
Rated Energy [kWh]	5.02*N	55.22	60.24
Rated Capacity [Ah]	314*N	3454	3768
Cycle Life		10000	
Depth of Discharge [%]		100	
Max.Charge/Discharge Current [Ad.c.]	6*N	60	60
Input/Output Power [kW]	2.5*N	25	25
Peak Charge/Discharge Power (10 seconds) [kW]		3.75	
Max. Output Current [Ad.c.]		6	
Operating Voltage Range [Vd.c.] (Single phase system)		420 ~ 500	
Operating Voltage Range [Vd.c.] (Three phase system)		420 ~ 500	
Battery Rated Voltage [Vd.c.]		16	
Communication		CAN	
Storage Temperature Range [° C]		-25 ~ +60	
Operating Temperature Range [° C]		-20 ~ +55*	
Relative Humidity Range [%]		5 ~ 95	
Max. Operating Altitude [m]		4000	
Cooling Concept		Natural Cooling	
Ingress Protection		IP66	
Protective Class		Class I	
Installation Method		Floor-Mounted	
Number of Modules Per Controller		1 ~ 6	
Safety		IEC 62619	
EMC		IEC 61000-6-1/2/3/4	
Transportation		UN38.3	

*The battery cell is equipped with a heating film; if the temperature falls below 0° C, it will be heated to 0° C before charging begins.

11.2 Contact Information

If you have any questions about this product, please contact us.

In order to provide you with faster and better after-sales service, we need your assistance in providing the following information.

- Equipment model : _____
- Serial number of the equipment: _____
- Fault code / name: _____
- A brief description of the fault phenomenon: _____

_____

_____

_____

Version: UM_HYX-BAT-QS5_V1.5-202610_EN
The manual is subject to change without notice while the product is being improved.

Zhejiang Hyxi Technology Co., Ltd.

Building 1, No. 57 Jiang'er Road, Changhe Street, Binjiang District,
Hangzhou, Zhejiang Province, China
www.hyxipower.com
support@hyxipower.com