User Manual

LIQUID COOLING ENERGY STORAGE SYSTEM

HYX-EL261P2-EU/HYX-EL261P2-AU

Carefully read this user manual before using the product.
Read and save these instructions.

© ZHEJIANG HYXI TECHNOLOGY CO., LTD. All rights reserved.

This document cannot be copied fully or partially, transferred, or distributed in any form without the prior written permission of ZHEJIANG HYXI TECHNOLOGY CO., LTD (hereinafter referred to as "HYXI").

TRADEMARKS

HYXI

and other HYXI trademarks are the trademarks or registered trademarks of HYXI All other trademarks mentioned herein are the properties of their respective owners.

Contents

Preface **1**
Scope of Application 1
For Readers 1
Use of the Manual 1
Use of Symbols 2
1 Safety Precautions **3**
1.1 Personal Safety 4
1.2 Electrical Safety 6
1.3 Environmental Safety 9
1.4 Machinery Safety 14
1.5 Product Safety 18
1.5.1 Energy Storage System Safety 18
1.5.2 Battery Safety 19
2 Product Overview **23**
2.1 Product Description 23
2.2 Product Introduction 23
2.3 Product Highlights 23
2.4 Product Appearance 24
2.5 Components Introduction 25
2.6 Circuit Diagram 29
2.7 Device Indicator Status 30
2.8 Supported Grid Forms 31
3 Transportation & Storage **32**
3.1 Transportation Requirements 32
3.2 Storage Requirements 33
4 Pre-Installation Preparation **34**
4.1 Site Selection Requirements 34
4.2 Clearance Requirements 36
4.3 Foundation Requirements 37
4.4 Forklift Requirements 38
4.5 Hoisting Requirements 39
5 Mechanical Installation **40**
5.1 Pre-installation Check 40
5.2 Installation Tools 40
5.3 Packing List 41

5.4 Installing the ESS 42
5.4.1 Unpacking and Acceptance 42
5.4.2 Positioning Plate Operation 43
5.4.3 Cabinet Handling: Crane Hoisting / Forklift Requirements 43
5.4.4 Fixing the Energy Storage System 43
6 Electrical Connections 44
6.1 Grounding Cable Connection 44
6.2 AC Cable Connection 45
6.3 Parallel Connection 45
7 ESS System Commissioning 46
7.1 Checking before Power-On 46
7.2 Powering On the ESS 47
7.3 Powering Off the ESS 48
8 Equipment Operation Control 49
8.1 Login to The Energy Management System 49
8.2 EMS System Main Interface 50
9 Troubleshooting 51
10 Emergency Handling 53
11 Appendix 56
11.1 Technical Parameter 56
11.2 How to Repaint the Cabinet 57
11.3 Contact Information 60

Preface

This manual provides the user with product installation, electrical connection, debugging, and fault handling methods of the energy storage system.

To ensure the proper installation and use of the energy storage system and its superior performance, before installing and using the product, please read this manual carefully, understand safety information, and be familiar with the functions and characteristics of the energy storage system.

Please read the operating instructions in detail and follow all safety precautions in the instructions.

Scope of Application

This manual is intended for the following device:

- HYX-EL261P2-EU/HYX-EL261P2-AU

For Readers

This manual is intended for professional technicians who need to install, operate and maintain the product and for users who need to check the product parameters.

All installation operations must be carried out by professional technicians and only by professional technicians.

Use of the Manual

Please read the manual carefully before using the product, the content of the manual will be updated and corrected, but it is inevitable that there is a slight discrepancy or error with the actual product. Users should refer to the actual product purchased and obtain the latest version of the manual by downloading from www.hyxipower.com or through sales channels.

The latest version of the manual is available for download at or through sales channels.

Use of Symbols

To ensure user safety and property protection during product use, relevant information is provided and highlighted with the following symbols.

⚠ DANGER

- Indicates a high potential hazard that, if not avoided, could result in death or serious injury.

⚠ WARNING

- Indicates a moderate potential hazard that could result in death or serious injury if not avoided.

⚠ CAUTION

- Indicates a low potential hazard which, if not avoided, could result in moderate or minor injury.

NOTICE

- Indicates a potential risk which, if not avoided, could result in the equipment not functioning properly or in property damage.

1 Safety Precautions

Statement:

Before transporting, storing, installing, operating, using, and/or maintaining the equipment, please read this manual first, strictly follow the instructions in the manual, and follow all safety precautions marked on the equipment and in the manual.

In this manual, "equipment" refers to the products, software, components, spare parts, and/or services related to this manual; "Our company" refers to the manufacturer (producer), seller, and/or service provider of the equipment. "You" refers to the entity responsible for transportation, storage, installation, operation, use, and/or maintenance of equipment.

NOTICE

- The "**DANGER**", "**WARNING**", "**CAUTION**", and "**NOTICE**" items in the manual do not represent all safety precautions that should be followed. You are also required to comply with relevant international, national, or regional standards, as well as industry practices. Our company does not assume any responsibility for any violation of safety operation requirements or violation of safety standards for design, production, and use of equipment.
- This equipment should be used in an environment that meets the design specifications, otherwise it may cause equipment failures, abnormal equipment functions, or component damage, which is not within the scope of equipment quality assurance; Otherwise, our company shall not be liable for compensation for potential personal injury, property damage, etc.
- All operations such as transportation, storage, installation, operation, use, and maintenance shall comply with applicable laws, regulations, standards, and regulatory requirements. Reverse engineering, decompilation, disassembly, adaptation, implantation, or other derivative operations on device software are prohibited. It is not allowed to study the internal implementation logic of the device, obtain the source code of the device software, or infringe intellectual property rights in any way.

Our company is not responsible for any of the following situations or their consequences:

- Equipment damage caused by earthquakes, floods, volcanic eruptions, mudslides, lightning strikes, fires, wars, armed conflicts, typhoons, hurricanes, tornadoes, extreme weather, and force majeure;
- Not operating under the usage conditions specified in this manual;
- The installation and use environment does not comply with relevant international, national or regional standards;
- Not following the operating instructions and safety warnings in the product and documentation;
- Unauthorized disassembly, modification of products or modification of software codes;
- Damage caused by you or your commissioned third-party transportation;

- Damage caused by storage conditions not meeting product documentation requirements;
- The materials and tools you provided do not meet the requirements of local laws, regulations, and relevant standards;
- Damage caused by your or a third party's negligence, intentional, gross negligence, improper operation, or non company reasons.

1.1 Personal Safety

⚠ DANGER

- Live operation is strictly prohibited during the installation process. It is prohibited to install or remove cables with electricity. When the cable core comes into contact with the conductor, it may generate an arc, electric spark, or fire explosion, which can cause fire or personal injury.
- When the equipment is electrified, non-standard and incorrect operation may cause fire, electric shock or explosion, resulting in personal injury or property damage.
- It is strictly prohibited to wear conductive objects such as watches, bracelets, bracelets, rings, necklaces, etc. during the homework process to avoid electric shock and burns.
- Special insulation tools must be used during the homework process to avoid electric shock injury or short circuit faults. The insulation withstand voltage level must meet local laws, regulations, standards, and specifications.

⚠ WARNING

- Special protective equipment must be used during the work process, such as wearing protective clothing, insulated shoes, goggles, safety helmets, insulated gloves, etc.

NOTICE

Routine Requirements:

- Do not disable equipment protection devices and ignore warnings and preventive measures in the manual and equipment.
- In the process of equipment operation, if any faults that may cause personal injury or equipment damage are found, the operation should be immediately terminated, reported to the person in charge, and effective protective measures should be taken.
- Do not power on the device until it has been installed or confirmed by a professional.
- It is prohibited to directly contact, use other conductors to contact, or indirectly contact the power supply equipment through damp objects. Before touching any conductor surface or terminal, the voltage at the contact point should be measured to confirm that there is no risk of electric shock.
- When the equipment is running, the shell temperature is high and there is a risk of burns. Please do not touch it.

NOTICE

Routine Requirements:

- It is strictly prohibited for fingers, components, screws, tools, or boards to come into contact with the running fan to avoid injuring hands or damaging equipment.
- In case of fire, evacuate the building or equipment area and press the fire alarm bell, or call the fire alarm hotline. Under any circumstances, it is strictly prohibited to re-enter the burning building or equipment area.

NOTICE

Personnel Requirements:

- The personnel responsible for operating the equipment include professionals and trained personnel.
  - » Professional personnel: Those who are familiar with the principles and structures of equipment, have training or experience in operating equipment, and are able to understand the potential sources and levels of hazards during equipment installation, operation, and maintenance.
  - » Trained personnel: Personnel who have received appropriate technical and safety training and have necessary experience, can be aware of the potential dangers that may arise when performing a certain operation, and can take measures to minimize the danger to themselves or other personnel.
- The personnel responsible for installing and maintaining equipment must first undergo strict training, master the correct operating methods, understand various safety precautions and relevant standards of the country/region where they are located.
- Only qualified professionals or trained personnel are allowed to install, operate, and maintaine quipment.
- Only qualified professionals are allowed to dismantle safety facilities and repair equipment.
- Personnel involved in special scenarios such as electrical operations, high-altitude operations, and special equipment operations must have the special operation qualifications required by the local country/region.
- The operator of medium voltage equipment must hold a high-voltage electrician operation certificate.
- The replacement of equipment or components (including software) must be completed by authorized professionals.
- Except for personnel operating the equipment, please do not approach the equipment.

1.2 Electrical Safety

DANGER

- Before making electrical connections, please ensure that the equipment is not damaged, otherwise it may cause electric shock or fire.
- Irregular and incorrect operations may cause accidents such as fires or electric shocks.
- During the homework process, it is necessary to prevent foreign objects from entering the interior of the equipment, otherwise it may cause equipment short circuit failure or damage, load power reduction or power loss, and personal injury.
- When installing equipment that needs to be grounded, the protective ground wire must be installed first; When dismantling equipment, the protective ground wire must be removed last.
- No cables are allowed to pass through the air inlet and outlet of the equipment.

NOTICE

General Requirements:

- Installation, operation, and maintenance must be carried out in accordance with the steps in the manual. Do not modify, add, or change equipment without authorization, and do not change the installation sequence without authorization.
- It is necessary to obtain permission from the power department of the country or region in order to connect to the grid for operation.
- Comply with the safety regulations of the power station, such as implementing the operation ticket and work ticket system.
- Install temporary fences or warning ropes in the work area and hang "No Entry" signs. Non-staff are strictly prohibited from entering.
- Before installing or removing power cables, the equipment itself and its front and rear switches must be disconnected.
- When liquid is found entering the equipment, please immediately turn off the power and prohibit further use.
- Before operating the equipment, it is necessary to carefully check that the tools used meet the requirements and register them in the register; After the operation is completed, retrieve it according to the number to prevent it from being left inside the equipment.
- Before installing the power cable, it is necessary to confirm that the cable label identification is correct and that the cable terminals have been properly insulated.
- When installing equipment, it is necessary to use a torque tool with an appropriate range to tighten the screws. When tightening with a wrench, it is necessary to ensure that the wrench is not skewed and the torque error does not exceed the specified 10%.
- The screws should be fixed using torque tools and double checked with red and blue markings. After confirming the tightening of the screws, the installation personnel shall apply blue markings on the screws; After the inspector confirms tightening, apply a red marking (marking with a line needs to cross the edge of the screw).

NOTICE

General Requirements:

- After installation, ensure that all electrical component protective shells, insulation sleeves, and other devices are in place to avoid the risk of electric shock.
- If the device has multiple inputs, all inputs should be disconnected and the device can only be operated after it is completely powered off.
- When maintaining the power supply equipment's downstream power consumption or distribution equipment, it is necessary to disconnect the corresponding output switch of the power supply equipment.
- During equipment maintenance, hang a "No Closing" sign on the up and down switches or circuit breakers, and post a warning sign to prevent accidental connections. The fault must be resolved before power can be restored.
- When conducting fault diagnosis and troubleshooting, if a power outage is required, the following safety measures must be taken: power outage>power verification>installation of grounding wire>hanging of signs and installation of barriers.
- Please regularly check the device connection terminal screws to ensure they are tightened and not loose.
- If the cable is damaged, it must be replaced by professional personnel to avoid risks.
- It is strictly prohibited to artificially alter, damage or obstruct the markings and nameplates on the equipment, and to replace any markings that have become unclear due to long-term use in a timely manner.
- It is prohibited to clean the internal and external electrical components of the equipment with solvents such as water, alcohol, or oil.

WARNING

- The grounding impedance of the equipment should meet the requirements of local electrical standards.
- The equipment should be permanently connected to a protective ground. Before operating the equipment, the electrical connections should be checked to ensure that the equipment is reliably grounded.
- It is prohibited to operate equipment without installing grounding conductors.
- Do not damage the grounding conductor.
- For devices using three core sockets, it is necessary to ensure that the grounding terminal in the three core socket is connected to the protective ground.
- If it is a high contact current device, before connecting to the input power supply, the protective grounding terminal of the device casing must be grounded to prevent the contact current of the device from causing electric shock to the human body.

NOTICE

Wiring Requirements:

- The selection, installation, and routing of cables must comply with local laws, regulations, and norms.
- During the process of laying the power cord, it is strictly prohibited to wrap or twist it. If the length of the power cord is found to be insufficient, it is necessary to replace the power cord and it is strictly prohibited to make joints or solder joints in the power cord.
- All cables must be firmly connected, have good insulation, and have appropriate specifications.
- Cable trays and wire holes should have no sharp edges, and the positions of cable conduits or wire holes must be protected to avoid damage from sharp edges, burrs, etc.
- If the cable is connected to the cabinet from the top, it needs to be U-bent outside the cabinet before entering the cabinet.
- Similar cables should be tied together, with a straight and neat appearance and no external skin damage; Different types of cables should be laid at least 30mm apart, and intertwining or cross laying is prohibited.
- When the wiring is completed or left during the wiring process, it is necessary to immediately seal the cable mouth with sealing mud to prevent water vapor and small animals from entering.
- Buried cables need to be reliably fixed using cable brackets and cable clamps. The cables in the backfilled soil area must be tightly attached to the ground to prevent deformation or damage caused by stress on the cables during backfilling.
- When the external conditions (such as laying method or ambient temperature) change, reference should be made to IEC-60364-5-52 or local regulations and specifications for cable selection verification, such as whether the current carrying capacity meets the requirements.
- The use of cables in high-temperature environments may cause aging and damage to the insulation layer, and the distance between the cable and the periphery of the heating device or heat source area should be at least 30mm.
- When the temperature is too low, severe impact and vibration may cause brittle cracking of the plastic outer skin of the cable.

NOTICE

To ensure construction safety, the following requirements should be followed:

- All cables should be laid and installed above 0°C . When handling cables, especially in low temperature environments, they should be handled carefully.
- If the storage environment temperature of the cable is below 0°C , the cable must be moved to room temperature for storage for at least 24 hours before laying.
- Prohibit non-standard operations such as directly pushing cables off the vehicle to avoid cable damage that may cause a decrease in cable performance and affect current carrying capacity and temperature rise.

NOTICE

Anti Static Requirements:

- The static electricity generated by the human body can damage the static sensitive components on the single board, such as large-scale integrated circuits (LSIs), etc.
- Before touching equipment, such as single boards, modules with exposed circuit boards, or specialized integrated circuit (ASIC) chips, please comply with electrostatic protection regulations, wear anti-static work clothes, anti-static gloves or wristbands, and ensure that the other end of the anti-static wristband is well grounded.
- When holding a single board or a module with an exposed circuit board, it is necessary to hold the edge of the single board or module and do not touch the components with your hands.
- The dismantled boards or modules must be packaged with anti-static packaging materials before they can be stored or transported.

1.3 Environmental Safety

DANGER

- It is strictly forbidden to place the equipment in an environment with flammable, explosive gases or fumes, and it is forbidden to perform any operation in such an environment.
- It is strictly forbidden to store flammable and explosive materials in the equipment area.
- It is strictly forbidden to place the appliance near a heat or fire source, such as fireworks, candles, heaters or other heat-generating devices, as heat may cause damage to the equipment or cause a fire.
- The equipment should be installed in an area away from liquid, and it is strictly forbidden to install it under the water pipe, air outlet and other places that are prone to condensation.
- It is strictly forbidden to install under the air conditioning port, vent, outlet window of the machine room and other places that are prone to water leakage, so as to prevent liquid from entering the equipment and causing equipment failure or short circuit.
- When the equipment is in operation, do not cover the vents, cooling system or other place to prevent high temperature damage to the equipment or fire.

NOTICE

General Requirements:

- The equipment should be stored in a clean, dry, well-ventilated area and protected from dust and condensation.
- It is strictly forbidden to install and operate the equipment beyond the scope specified in the technical indicators, otherwise the performance and safety of the equipment will be affected.

NOTICE

General Requirements:

- It is strictly forbidden to install, use and operate outdoor equipment and cables (including but not limited to handling equipment, operating equipment and cables, plugging and unplugging signal interfaces connected to the outdoors, aerial work, outdoor installation, door opening, etc.) in bad weather such as lightning, rain, snow, and strong winds above level 6.
- It is strictly forbidden to install the equipment in an environment with dust, smoke, volatile gases, corrosive gases, infrared and other radiation, organic solvents or high salt content.
- It is strictly forbidden to install the equipment in an environment with metal conductive dust, magnetic conductive dust.
- It is strictly forbidden to install the equipment in areas where microorganisms such as fungi and mold can easily grow.
- It is strictly forbidden to install the equipment in areas of strong vibration, strong noise sources and strong electromagnetic field interference.
- Site selection should comply with local laws and regulations and relevant standards.
- The installation environment has a solid ground, no bad geology such as rubber soil, weak soil or easy sinking, it is strictly forbidden to choose low-lying areas or areas prone to water accumulation, and the site should be higher than the highest historical water level in the area.
- It is strictly forbidden to install the device in a location where water can be submerged.
- If the equipment is installed in a place with lush vegetation, in addition to routine weeding, the ground under the equipment needs to be hardened, such as laying cement, stones, etc.
- During installation, operation, and maintenance, it is necessary to clean up the stagnant water, ice and snow or other debris on the top first, and then open the door to prevent debris from falling into the equipment.
- When installing the device, make sure that the mounting surface is sturdy and meets the loadbearing requirements of the equipment.
- The wiring holes need to be sealed, seal the wiring holes that have been routed with sealing mud, and use the cover that comes with the equipment to seal the wiring holes that have not been routed.
- After installing the equipment, empty packaging materials such as cartons, foam, plastic, cable ties, etc. should be removed from the equipment area.

NOTICE

Site Selection Requirement:

- The ESS site selection and fire safety must comply with local laws and regulations. Reference standards include but are not limited to the "GB 51048 Design Code for Electrochemical Energy Storage Power Stations", "GB 50016 Code for Fire Protection Design of Buildings" and "NFPA 855 Standard for the Installation of Stationary Energy Storage Systems".

NOTICE

- During the installation, commissioning, and operation of the unit, fire extinguishers must be provided in the vicinity as required by the fire code. The number of extinguishers must exceed two.
- The minimum distance between the unit's exhaust and heating vents, air vents, air conditioning vents, window doors, or heat sources of the building or other installations shall be 4.6 meters.
- If this situation is unavoidable, such as during installation in areas where rainwater may accumulate, measures should be taken, such as the installation of water barriers or drainage facilities, or the raising of floors.

NOTICE

The installation site should meet the following requirements:

- The horizontal level of the installation site shall be above the highest water level of that area in history and at least 300 mm above the ground. The site must not be located in a low-lying land.
- Ensure that there is no vegetation planted within three meters of the site and its surroundings to avoid wildfires that could cause the appliance to catch fire in the summer heat.
- For safety reasons, the distance between the appliance and a dwelling should be more than 12 meters, while the distance between the appliance and a school, hospital, or other populated area should be at least 30.5 meters. If these measures are lacking, a firewall must be installed between the installation and the building.
- The safety distance between the installation and industrial buildings should comply with local fire safety codes and standards.

Safe Distance:

Item	Safe distance
Between installations and class A industrial buildings	≥ 12m
Between installations and class B industrial buildings	≥ 10m
Between installations and industrial buildings of class C and D meeting the requirements of fire-resistance class I and L.	≥ 10m
Between installations and industrial buildings meeting the requirements of Class III fire-resistant class.	≥ 12m
Where the external walls of adjacent buildings are made of fire-resistant materials and there are no windows, doors and retractable eaves, the safety distance shall be.	(3-25%*3)m

NOTICE

- If the above safety distances can't be achieved, fire walls between equipment, storeroom, or installation areas and buildings of categories C, D and E must have a 3-hour fire resistance rating. The firewall should measure 1 m taller and thicker than the equipment. Factors such as transportation, installation and maintenance should be considered before construction.
- Keep away from flammable and explosive materials.
- The installation site needs to be equipped with convenient transportation and a reliable fire extinguishing system.
- Please reserve sufficient space for expansion.
- The site should be well ventilated.
- The ESS shall not be installed in salt-affected or polluted areas because this will cause corrosion.

NOTICE

The ESS shall be used in the following or better environments:

- Outdoor environment more than 2000 m away from the coast. You are advised not to use the ESS in an area within 2000 m of the coast. (If you need to use it, confirm with the vendor or the Company's engineers).
- More than 3000 m away from heavy pollution sources such as smelteries, coal mines, and thermal power plants.
- More than 2000 m away from medium pollution sources such as chemical, rubber, and electroplating industries.
- More than 1000 m away from light pollution sources such as packing houses, tanneries, boiler rooms, slaughterhouses, landfill sites, and sewage treatment plants.

Installation Spacing Requirements:

Item	Safe distance
Distance from coastal area	> 2000m
Distance to heavy pollution sources such as smelters, coal mines, thermal power plants	> 1500m
Distance to moderate pollution sources such as chemical plants, rubber factories and electroplating plants	> 1000m
Distance to light pollution sources such as food processing plants, leather processing plants, heating boiler plants, slaughterhouses, dumping sites and sewage treatment stations	> 500m

NOTICE

- Away from sandy and dusty environments.
- Away from high vibration, strong noise sources or strong electromagnetic interference areas.
- Away from places prone to dust, fumes, noxious gases, corrosive gases, and so on.
- Away from places where corrosive, flammable and explosive materials are stored.
- Away from places where underground facilities have been built.
- Away from areas with poor geology (e.g., rubbery soil, weak soil), and waterlogged ground or ground subsidence.
- Away from underneath reservoirs, water features and water intake chambers.
- Away from earthquake zones and seismic areas with a seismic intensity exceeding 9 degrees.
- Away from areas where natural disasters (e.g., mudslides, landslides, quicksand) may occur and karst caves.
- Do not install the unit within the boundaries of a mining subsidence (impact) area.
- Away from areas where there is a risk of explosion.
- Away from areas that may be flooded if a dike or dam breaks down.
- Away from important water protection areas.
- Away from heritage conservation areas.
- Away from population centers, high-rise buildings and underground buildings.
- Away from intersections of main city streets and heavily traveled roads.

NOTICE

Select the installation site following these flood and storm water control requirements:

- The foundation height of large, medium, and small electrochemical energy storage systems must be higher than the highest recorded water level.
- If the installation site cannot meet these requirements, please find another site or take flood control measures according to the situation.
- For energy storage plants next to rivers, lakes, and oceans, the foundation height must be 0.5 meters above the highest historical wave height.

NOTICE

- If large amounts of water flow into or over the foundations, it is recommended that you construct side ditches or drainage channels.

NOTICE

A "Stop" sign is required at the installation site:

- It is recommended that solid walls or fences be constructed around the area of the energy storage device. For fences, they must be lockable and should exceed 2.2 meters in height. Depending on the combination of considerations, firewalls may be constructed instead of partial or complete fences.

1.4 Machinery Safety

NOTICE

- Wear a safety helmet, safety belt or waist rope for aerial work, tie it to a firm and sturdy structural part, and it is strictly forbidden to hang it on a moving unstable object or a metal with sharp edges and corners to prevent the hook from slipping and falling accidents.
- Tools need to be prepared and inspected by professional institutions, it is forbidden to use tools with scars and unqualified inspection or beyond the validity period of the inspection, to ensure that the tools are firm and not overloaded.
- Before the equipment is installed in the cabinet, first make sure that the cabinet has been fixed to avoid the cabinet from tilting and collapsing due to the unstable center of gravity, resulting in the installer being hurt and the equipment being broken.
- When pulling equipment out of the cabinet, be careful to install equipment that may be unstable or heavy in the cabinet to avoid being hurt.
- It is strictly forbidden to drill holes in the equipment. Drilling can compromise the device's tightness, electromagnetic shielding, internal components, and cables, and metal shavings from drilling holes can enter the device and cause a short circuit on the board.

NOTICE

General Requirements:

- Paint scratches during transportation and installation of equipment must be repaired in time, and long-term exposure of scratched parts is strictly prohibited.
- Without the company's evaluation, it is forbidden to carry out arc welding, cutting and other operations on the equipment.
- It is forbidden to install other equipment on top of the equipment without the company's evaluation.

NOTICE

General Requirements:

- When working in the space above the top of the equipment, protection should be added to the top of the equipment to avoid damage to the equipment.
- Use the right tools and master the correct use of them.

NOTICE

Handling Safety:

- When carrying heavy objects, you should be prepared to bear heavy loads to avoid being crushed or sprained by heavy objects.
- When multiple people carry heavy objects at the same time, it is necessary to consider the height and other conditions, and do a reasonable job of personnel matching and division of labor to ensure a balanced weight distribution.
- When two or more people carry heavy loads together, one person should be responsible for directing them to lift or lower the equipment at the same time to ensure a uniform pace.
- When handling equipment by hand, you should wear protective gloves, labor protection shoes and other safety protective equipment to avoid injury.
- When carrying the equipment by hand, first approach the object, squat down, use the force of straightening your legs, do not use the strength of your back, slowly and steadily lift the object, and it is strictly forbidden to suddenly jerk or twist the torso.
- When moving or lifting the device, hold the handle of the device or the bottom edge of the device, not the handle of the module installed in the device.
- Do not quickly lift heavy objects above waist height, place heavy objects on a half-waist high work table or an appropriate place, adjust the position of your palms, and then lift them.
- The handling of heavy objects must be balanced and steady, the moving speed should be uniform and low, and the position should be stable and slow, so as to avoid any impact or fall and other scratches on the surface of the equipment or damage to the components and cables of the equipment.
- When carrying heavy objects, special care should be taken to work benches, slopes, stairs and some places that are easy to slip, and when carrying heavy objects through thresholds, ensure that the width of the door is sufficient for the equipment to pass through to prevent collisions or abrasions on fingers.
- When conveying heavy objects, you should move your feet instead of twisting your waist.
- When you need to lift and pass heavy objects at the same time, you should point your feet in the direction you want to move before moving.

NOTICE

Handling Safety:

- When using a forklift for handling, the forklift must be forked in the middle position to prevent tipping over. Before moving, please use a rope to fasten the equipment to the forklift, and when moving, a special person needs to take care of it.
- When transporting, you should choose sea or road with good road conditions, and do not support railway and air transportation. Bumps and tilts should be minimized during transportation.
- The tilt angle of the cabinet is required, the inclination angle of the package is $\alpha \leqslant 15°$, and the inclination angle is $\alpha \leqslant 10°$ after removing the package.

NOTICE

Aerial Work Safety:

- Operations carried out at a height of more than 2 meters above the ground are classified as aerial work, and guardians must be set up for aerial work.
- You must go through relevant training and obtain relevant qualifications before you can take up your post and work at height.
- If the steel pipe rainwater is not dried or other dangerous situations may occur, the aerial work should be stopped. When the above situation is over, the safety person in charge and relevant technical personnel must check all kinds of operating equipment and confirm the safety before operation.
- At the aerial work site, a dangerous forbidden area should be demarcated, obvious signs should be set up, and irrelevant personnel should be strictly prohibited from entering.
- Guardrails and signs should be set up along the mouths and holes of aerial work to prevent stumbling into the air.
- It is strictly forbidden to stack scaffolding, springboards or other sundries on the ground below the aerial work area. It is strictly forbidden for ground personnel to stay or pass directly below the aerial work area.
- Carry the operating equipment and tools in a suitable place to prevent equipment damage or personal injury caused by falling tools.
- It is strictly forbidden for aerial worker to throw objects from high altitude to the ground, and it is strictly forbidden to throw objects from the ground to high altitude, and slings, hanging baskets, overhead vehicles or cranes should be used to transmit objects.
- The upper and lower layers should be avoided as much as possible to carry out operations at the same time. If it cannot be avoided, a special protective shed or other protective measures must be set up between the upper and lower floors, and it is strictly forbidden to stack tools and materials on the upper floor.
- When the scaffold is dismantled after the completion of the work, it should be carried out in layers from top to bottom, and it is strictly forbidden to disassemble the upper and lower layers at the same time.

NOTICE

Aerial Work Safety:

- Personnel working at height shall operate in strict accordance with the safety regulations at height, and the company shall not be responsible for accidents caused by violations of the safety regulations at height.
- It is strictly forbidden to laugh and play when working at height, and it is strictly forbidden to rest in the aerial work area.

NOTICE

Ladder Using Safety:

- When there may be electricity for operation, a wooden ladder or insulated ladder should be used.
- Priority is given to the use of platform ladders with protective fences for climbing operations, and the use of slotted ladders is prohibited.
- Before using the ladder, please confirm that the ladder is intact, the weight of the ladder meets the requirements, and it is strictly forbidden to use it with excessive weight.
- The ladder must be placed in a stable place, and someone must hold the ladder when working.
- When climbing ladders, keep your body steady and ensure that your center of gravity does not deviate from the edge of the ladder frame to reduce danger and ensure safety.
- When using a herringbone ladder, the drawstring must be secure.

NOTICE

Hoisting Safety:

- Personnel who carry out hoisting operations need to undergo relevant training and can only take up their posts after they are qualified.
- The hoisting area needs to be isolated by erecting temporary warning signs or fences.
- The foundation for hoisting operations must meet the load-bearing requirements of crane work.
- Before hoisting, make sure that the hoisting tool is firmly fixed to the fixture or wall that meets the load-bearing standard.
- When hoisting, it is strictly forbidden to walk under the boom and hoisting objects.
- When hoisting, it is forbidden to drag wire ropes and spreaders, and it is forbidden to use hard objects to impact.
- During the hoisting process, ensure that the angle between the two cables is not more than 90° .

NOTICE

Drilling Safety:

- Consent should be obtained from the customer and contractor prior to drilling.
- Safety protective equipment such as goggles and protective gloves should be worn when drilling.
- When drilling, avoid buried pipes or lines to avoid short circuits or other hazards.
- When drilling, the equipment should be shielded and protected to prevent debris from falling into the equipment, and debris should be cleaned up in time after drilling.

1.5 Product Safety

1.5.1 Energy Storage System Safety

NOTICE

- When the system is running, do not open the cabinet door.
- When the energy storage system fails, please avoid standing at the cabinet door (including the cabinet door opening range).
- After the fire sound and light alarm is triggered, the scene should be evacuated urgently.
- The energy storage system must be equipped with protective measures such as fences and safety warning signs must be erected for isolation to avoid unauthorized personnel entering during the operation of the equipment, resulting in personal injury or property damage.
- The installation layout of the energy storage system must meet the fire distance or firewall requirements specified by local standards, including but not limited to the NFPA 855 Standard for the Installation of Stationary Energy Storage Systems.
- The energy storage system should be inspected regularly and not less than once a month.
- When the system is live for inspection, you should pay attention to the danger warning signs on the equipment and avoid standing at the cabinet door.
- After the power components of the energy storage system are replaced or the wiring is changed, the wiring detection and topology identification need to be manually started to avoid abnormal system operation.
- It is recommended that users bring their own camera devices to record the detailed process of installation, operation and maintenance of equipment.

1.5.2 Battery Safety

NOTICE

- Do not short the positive and negative poles of the battery, otherwise it will cause a short circuit in the battery. A short circuit in a battery can instantly generate a large current and release a large amount of energy, causing the battery to leak, smoke, release combustible gases, thermal runaway, fire, or explosion. To avoid short circuits in the battery, live maintenance is not allowed.
- Do not expose the battery to high-temperature environments or around heat-generating equipment, such as high-temperature sunlight, fire sources, transformers, heaters, etc.
- Overheating the battery may cause leakage, smoke, release of flammable gases, thermal runaway, fire, or explosion.
- It is strictly forbidden for the battery to be subjected to mechanical shock, drop, collision, puncture by hard objects and pressure impact, otherwise it may cause damage to the battery or fire.
- It is strictly forbidden to disassemble, modify or destroy the battery (such as inserting foreign objects, extruding by external force, immersing in water or other liquids) to avoid leakage, smoke, release of combustible gas, thermal runaway, fire or explosion of the battery.
- It is strictly forbidden for the battery terminals to come into contact with other metal objects, which may cause heat generation or electrolyte leakage.
- Incorrect battery type used or replaced will cause a risk of fire and explosion. Please use the battery of the standard model recommended by the maker.
- Battery electrolytes are toxic and volatile. When electrolyte leakage occurs or there is an abnormal odor, contact with the leaking liquid or gas should be avoided. Non-professionals should not approach, please contact professionals immediately. Professionals should wear goggles, rubber gloves, gas masks, protective clothing, etc., power off the equipment in time, and take out the leaking battery, and contact the technical engineer for treatment.
- The battery is a closed system and no gas is released under normal operation. If in extreme abuse situations, such as fire, needle prick, crushing, lightning strike, overcharging or other harsh conditions that may cause thermal runaway of the battery, it may lead to battery damage or abnormal chemical reactions inside the battery, resulting in electrolyte leakage or the production of CO, H2 and other gases, the site should ensure that the flammable gas emission measures are normal to avoid causing combustion or corrosion of the equipment.
- Gases from battery combustion can irritate the eyes, skin, and throat, so please take precautions.
- The battery should be installed in an area far away from liquid, and it is strictly forbidden to install it under the air conditioning port, vent, outlet window of the computer room, water pipe and other water-prone locations to prevent liquid from entering the equipment and causing equipment failure or short circuit.

NOTICE

- When the battery is installed and commissioned, it must be equipped with fire-fighting facilities in accordance with the requirements of the construction standards and specifications, such as fire-fighting sand, carbon dioxide fire extinguishers, etc. Before putting into operation, it is necessary to ensure that the fire protection facilities are in place to meet the requirements of local laws, regulations and codes.
- Before the battery is dismantled and packaged, when stored and transferred, ensure that the outer packaging box is intact and undamaged, and place it correctly according to the identification of the packaging box.
- After the battery is unpacked and placed in the required direction, it is strictly forbidden to put it upside down, sideways, vertically, tilted and stacked to avoid any damage to the battery caused by impact or drop.
- Tighten the fastening screws of the copper bar or cable according to the torque specified in the text, regularly check whether they are tightened, whether there are rust, corrosion or other foreign objects, and deal with them cleanly, otherwise the virtual connection of the screws will lead to excessive connection voltage drop, and even burn the battery when the current is large.
- After the battery is discharged, the battery should be charged in time, otherwise the battery may be damaged due to over discharge.

⚠ CAUTION

The company is not responsible for damage and other results of the battery provided by the company due to the following reasons:

- Battery damage caused by earthquakes, floods, volcanic eruptions, mudslides, lightning strikes, fires, wars, armed conflicts, typhoons, hurricanes, tornadoes, extreme weather, force majeure;
- Direct damage to the battery caused by the operating environment of the field equipment or the external power parameters that cannot meet the environmental requirements of normal operation, including but not limited to the actual operating temperature of the battery is too high or too low, the power grid is unstable and the power outage is frequent, etc.;
- Battery damage, dropping, leakage, rupture, etc. caused by improper operation or failure to connect the battery as required;
- The battery is installed on site and connected to the system, and the battery is damaged due to over-discharge due to your failure to power on in time;
- The battery is damaged due to your failure to accept the acceptance in time;
- You have not set the battery operation management parameters correctly;
- You mix the batteries provided by the Company with other batteries to accelerate the capacity decay, including but not limited to: mixing with other brands of batteries, mixing with batteries with different rated capacities, etc.;

⚠ CAUTION

The company is not responsible for damage and other results of the battery provided by the company due to the following reasons:

- Your improper maintenance causes the battery to be frequently over discharged, your onsite expansion or long-term inability to fully charge, etc.;
- You have not carried out proper maintenance of the battery in accordance with the operation manual of the supporting equipment, including but not limited to: failing to regularly check whether the battery terminal screws are tightened, etc.;
- The battery is damaged due to your failure to store it in accordance with the storage requirements (such as in a humid, rain-prone environment, etc.);
- Failure to charge the battery in time due to your reasons, resulting in overdue storage of the battery, loss of capacity or irreversible damage to the battery, etc.;
- Battery damage caused by you or a third party, including but not limited to: relocation and installation of the battery without authorization as required by the company;
- Change the battery usage scenario by yourself without the company's evaluation.
- You connect the battery with an additional load by yourself;
- The battery has exceeded the maximum storage period;
- The battery is out of warranty.

⚠ CAUTION

Short Circuit Protection:

- When installing and maintaining the battery, it is necessary to wrap the exposed cable terminals on the battery with insulating tape.
- Avoid foreign objects (such as conductive objects, screws, liquids, etc.) from entering the battery and causing short circuits.

⚠ CAUTION

Leakage Handling:

- Electrolyte spillage will cause potential harm to the equipment, and the spilled electrolyte will corrode metal objects and PCB, resulting in damage to PCB.
- Electrolytes are corrosive and may cause skin irritation and chemical burns on contact.
- If you come into contact with the battery electrolyte, you need to take the following measures.
  - » Inhalation: Evacuate contaminated areas, inhale fresh air immediately, and seek medical help immediately.
  - » Eye contact: Immediately rinse your eyes with plenty of water for at least 15 minutes, do not rub, and seek medical help immediately.
  - » Skin contact: Wash the contact area immediately with plenty of water and soap and seek medical help immediately.
  - » Intake: Seek medical help immediately.

NOTICE

Recycling:

- Please dispose of used batteries in accordance with local laws and regulations, and do not dispose of batteries as household waste. Improper disposal of the battery may result in environmental contamination or explosion.
- If the battery leaks or is damaged, please contact technical support or a battery recycling company for disposal.
- When a battery is out of service life and unusable, contact a battery recycling company for scrapping.
- Avoid exposing used batteries to high temperatures or direct sunlight.
- Avoid exposing used batteries to high humidity or corrosive environments.

2 Product Overview

2.1 Product Description

This manual involves the following product model:

- HYX-EL261P2-EU/HYX-EL261P2-AU

Identification	Meaning	Description
HYX	HYXiPOWER	Company name
EL	Liquid-cooled energy storage system	Cooling concept
261	261kWh	System rated capacity
P2	2h system/ 0.5C rate	A full charge or complete discharge takes 2 hours
EU/AU	European/Austrian	Products are suitable for the European/Austrian market.

2.2 Product Introduction

The HYX-EL261P2-EU is an integrated battery energy storage system comprising a lithium-ion battery pack (hereafter referred to as PACK), a power converter system (hereafter referred to as PCS), an energy management system (hereafter referred to as EMS), a liquid thermal management system (hereafter referred to as LTMS), and a Thermal Runaway Suppression System. Through EMS management, it achieves the storage and release of electrical energy.

Battery Charging: Controlled by the EMS, the PCS converts mains electricity or other power sources into direct current to charge the batteries, storing energy within them.

Battery Discharging: Controlled by the EMS, the stored battery energy is converted by the PCS into alternating current to supply power to the load.

2.3 Product Highlights

Integrated Design: Internal components of the energy storage system are seamlessly integrated, reducing footprint and simplifying installation and maintenance procedures, thereby significantly cutting installation time and costs.

Intelligent Liquid Cooling Management: The system employs intelligent liquid cooling management control technology, minimising temperature differentials between cells and maximising system efficiency to achieve optimal energy performance year-round.

2.4 Product Appearance

2.5 Components Introduction

Door closing

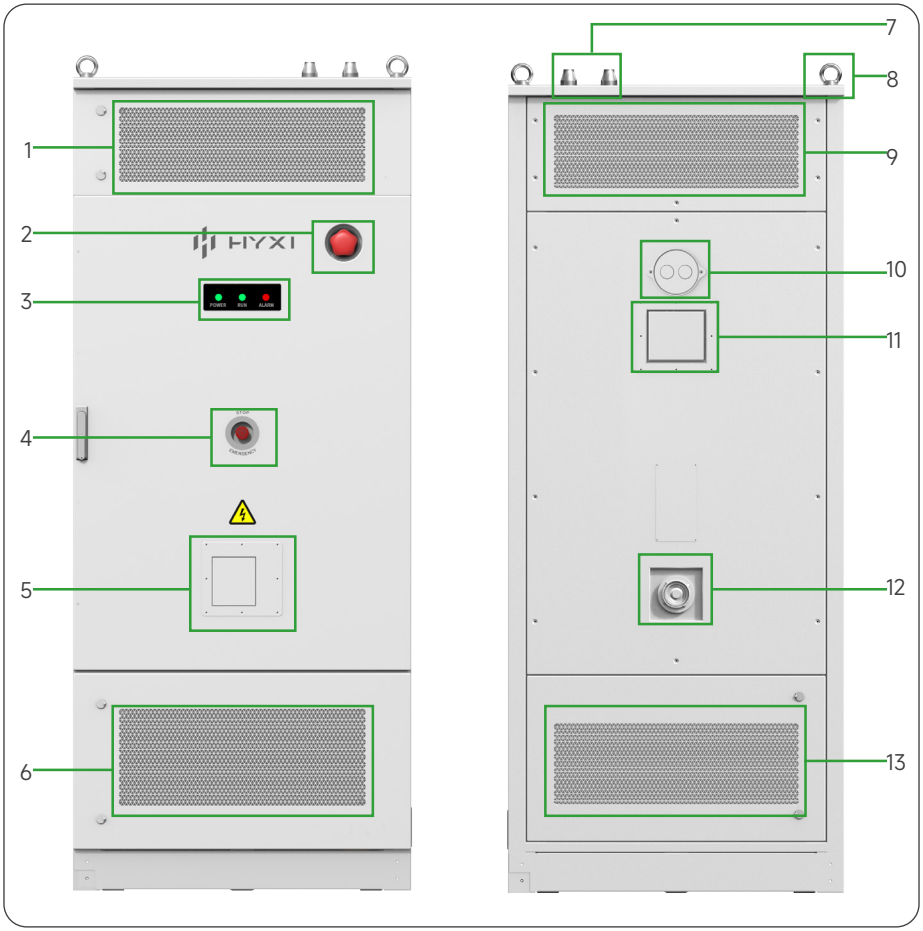

No.	Item	Description
1	Radiator Air Inlet	Air inlet of the liquid cooling unit radiator, with an external dust filter.
2	Audible and Visual Alarm	The audible and visual alarm consists of a control panel, alarm indicator lights, and a buzzer. It receives early warning signals from devices such as temperature sensors and smoke detectors, and activates the audible and visual alarm circuit to warn of potential dangers.
3	Status Indicator Light	Indicates the operating status of the energy storage system.
4	Emergency Stop Switch	Used for the emergency stop of the Energy Storage System (ESS, referred to as ESS hereinafter).

No.	Item	Description
5	Fire Protection Air Inlet Fan	Air inlet of the exhaust fan duct.
6	Electrical Cabin Air Inlet	Air inlet of the electrical cabin air duct.
7	Antenna	Connects the energy storage equipment to wireless signals.
8	Lifting Ring	Used for the hoisting of the energy storage system.
9	Liquid Cooling Unit Air Outlet	Air outlet for heat dissipation of the liquid cooling unit.
10	Explosion Vent Valve	Waterproof, breathable, and explosion-proof.
11	Fire Protection Exhaust Fan	Used to exhaust combustible gases in the energy storage equipment.
12	Water Fire Protection Interface	Fire hydrant connection point for the energy storage system, supporting DN65 interface connection.
13	Electrical Cabin Air Outlet	Electrical compartment duct outlet.

Door opening

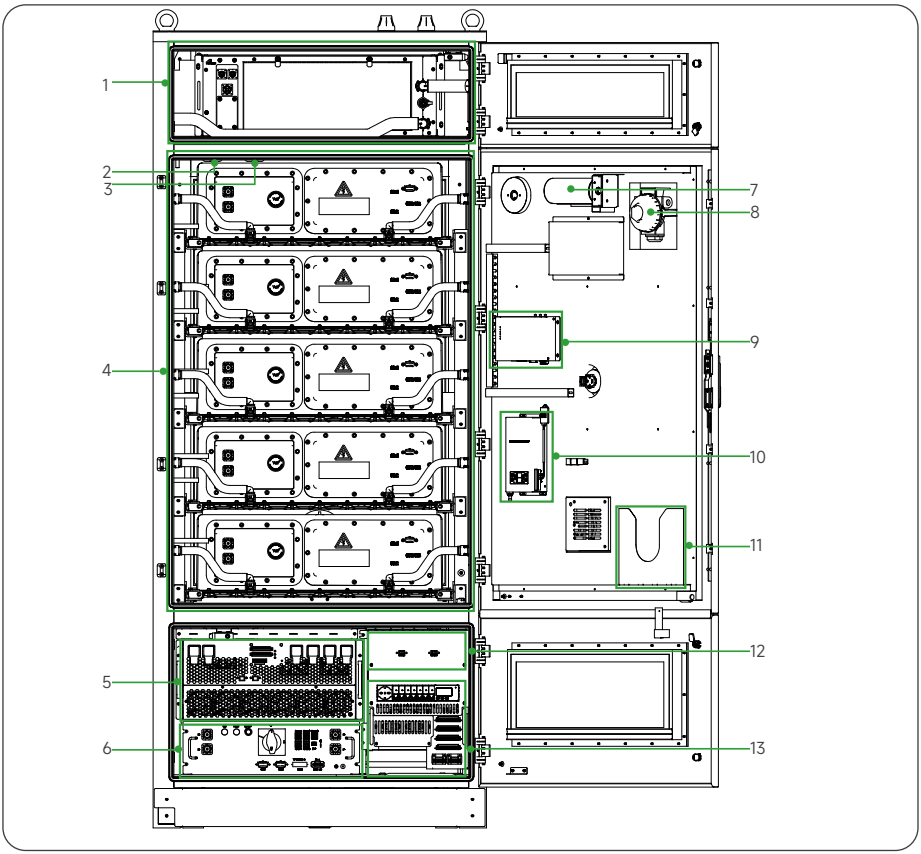

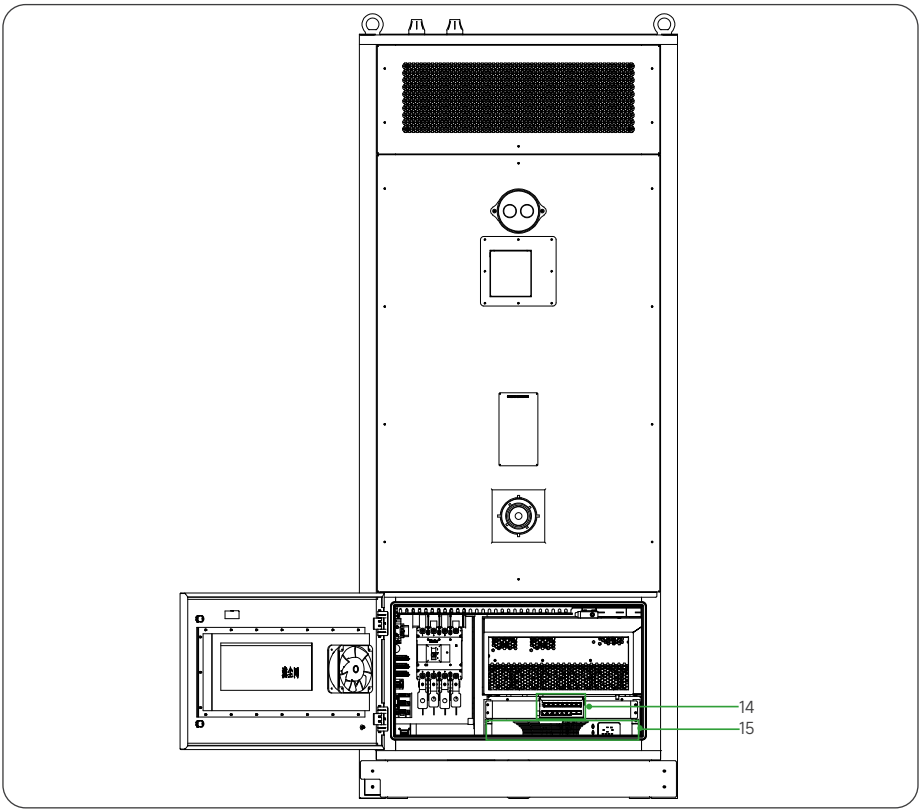

No.	Item	Description
1	Liquid Cooling Unit	Temperature control equipment, responsible for regulating the temperature of the battery cluster within the energy storage cabinet.
2	Smoke Detector	Photoelectric smoke detector, used for smoke detection.
3	Temperature Detector	Used for temperature detection
4	PACK	Utilises LFP-314ab cells, with 52 cells (1P52S) connected in series.
5	PCS	Energy storage converter, used for charging and discharging the battery cluster.
6	High Voltage Box	Battery cluster management and protection unit
7	Aerosol Fire Extinguishing Device	Fire suppression equipment, responsible for fire extinguishing within the energy storage cabinet.
8	Gas Detector	Responsible for detecting combustible gas H_2 concentrations within the energy storage cabinet.
9	EMS	Energy management system, responsible for network monitoring and energy dispatch of the energy storage cabinet.

No.	Item	Description
10	Dehumidifier	Regulate the internal air humidity of the energy storage system.
11	Document Rack	Used for storing energy storage system documentation, such as manual.
12	CMU	Cluster control unit, responsible for data acquisition from the energy storage cabinet.
13	AC Distribution Box	Low-voltage power distribution system for the energy storage cabinet.
14	Switch	Network expansion equipment, responsible for expanding the energy storage system.
15	UPS	Uninterruptible power supply.

2.6 Circuit Diagram

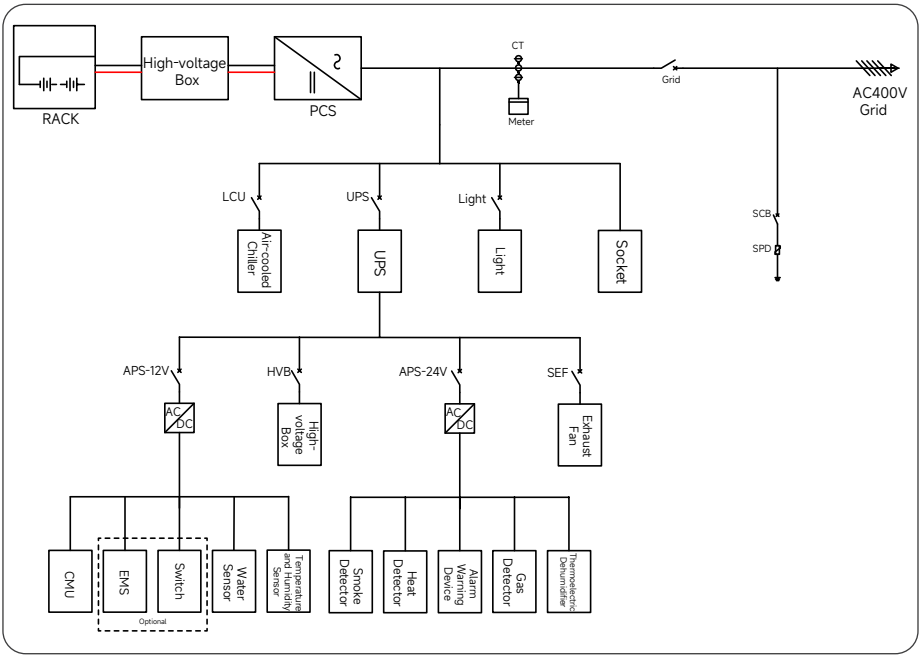

2.7 Device Indicator Status

System Indicator

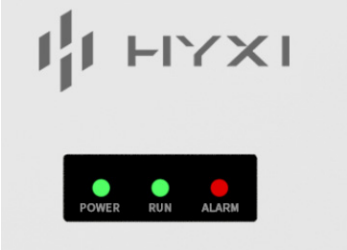

No.	Indicator	Explanation
1	POWER	• Steady green: The auxiliary power supply energised. • Light off: The auxiliary power supply de-energised.
2	RUN	• Solid Green: The energy storage system is charging/discharging. • Light off: The energy storage system is not charging/discharging.
3	ALARM	• Solid Red: The energy storage system is operating with an alarm condition. • Light off: The energy storage system is operating normally.

Inverter Indicator

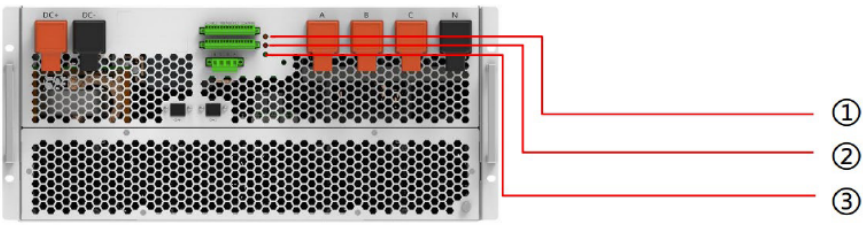

No.	Indicator	Explanation
1	Yellow Led Indicator	The power indicator will remain solid on when the DC input is higher than 60V.
2	Red Led Indicator	The alarm indicator light will remain solid on when a module malfunctions and triggers an alarm.
3	Green Led Indicator	The operating indicator flashes when the module is in standby/stop mode; it remains solid on when the module is running.

Indicators of High Voltage Box

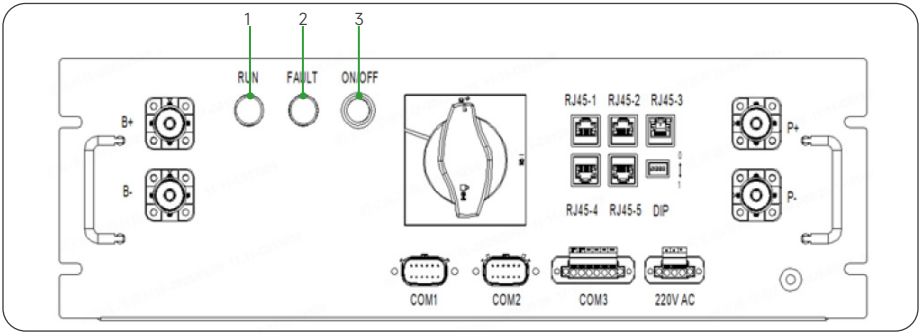

No.	Indicator	Explanation
1	RUN	• Steady green light indicates the handle switch is closed, the high-voltage main relay is closed, and the high-voltage bus current > 3A. • Green light off indicates the handle switch is not closed and the high-voltage main relay is open. • Flashing green light indicates the handle switch is closed, the high-voltage main relay is closed, and the high-voltage bus current ≤ 3A.
2	FAULT	• Steady red light indicates a serious fault protection in the battery system. • Red light off indicates the battery system is operating normally without faults or a level 1 warning occurs in the battery system. • Red light flashing 1 (on for 0.5s, off for 0.5s) indicates a level 2 system fault alarm in the battery system. • Red light flashing 2 (on for 1.5s, off for 0.5s) indicates a level 3 system fault protection in the battery system.
3	ON/OFF	• Steady green light indicates the switch is closed. • Green light off indicates the switch is open.

2.8 Supported Grid Forms

The ESS supports the TN-S and TN-C-S grid forms.

For the TN-S and TN-C-S systems, the neutral wire of the ESS must be connected to the power grid.

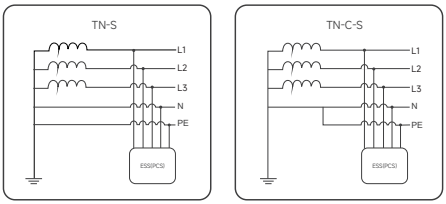

3 Transportation & Storage

3.1 Transportation Requirements

Item	Icon	Description
Upward		Indicates that the transport package should be kept upright during transport and storage.
Fragile items		Indicates that the package contains fragile items and should be handled with care.
Keep Dry		Indicates the package is susceptible to rain damage. Rainproof measures should be taken during logistics storage and transportation.
Do Not Tumble		Indicates the transport package must not be tumbled during logistics handling.
Do Not Stack		Indicates the package can only be placed in a single layer.

3.2 Storage Requirements

- Ambient Temperature: -35°C to +60°C (Recommended 0°C to 30°C ; long-term storage beyond 40°C may affect the Battery's Performance and Service Life).
- Relative Humidity: 5% RH to 95% RH (recommended around 45% RH).
- Drying, Ventilation, Cleaning.
- Avoid contact with corrosive organic solvents, gases, and other substances.
- Avoid direct sunlight.
- The distance from Heat Sources must not be less than two meters.
- When storing energy, the energy storage cabinet must be disconnected from the external connection, and the indicator lights on the energy storage cabinet should be off.
- The storage time is calculated from the most recent charging time marked on the replenishment label on the outer packaging of the energy storage cabinet. After the battery is properly replenished, refresh the most recent charging time (it is recommended to record the date and time) and the next charging time on the replenishment label (next charging time = most recent charging time + replenishment cycle).
- Batteries should be shipped according to the first-in, first-out (FIFO) principle.
- Batteries must be handled with care during transport; damage to the batteries is strictly prohibited.

4 Pre-Installation Preparation

4.1 Site Selection Requirements

- The installation horizontal plane shall be higher than the historical highest water level of the area and at least 300mm higher than the horizontal ground. The installation location shall not be in a low-lying area.
- The energy storage system or energy storage power station must be set in an environment without fire and explosion risks.
- The site shall have convenient transportation conditions and reliable fire suppression system equipment.
- Choose a place with good ventilation.
- The site selection shall avoid scenarios not recommended by industry standards and regulations, including but not limited to the following sections, areas and places:
    - » Areas with strong vibration, strong noise sources and strong electromagnetic field interference.
    - » Places that generate or have dust, oil fume, harmful gases, corrosive gases, etc.
    - » Places that produce or store corrosive, flammable and explosive items.
    - » Places with existing underground facilities.
    - » Ground with poor geological conditions such as mucky soil and weak soil layers, which are prone to water accumulation and settlement.
    - » Below reservoirs, water landscapes and water intake houses.
    - » Earthquake fault zones and earthquake zones with a seismic intensity higher than IX.
    - » Sections directly endangered by mudslides, landslides, quicksand, karst caves, etc.
    - » Within the limits of mining subsidence (dislocation) areas.
    - » Within the blasting danger range
    - » Areas that may be submerged after dams or dikes collapse.
    - » Sanitary protection zones of important water supply sources.
    - » Protection zones of historical and cultural relics.
    - » Crowded places, high-rise buildings and underground buildings.
    - » Intersections of urban arterial roads and busy traffic sections.

Prohibition of Indoor Installation of Energy Storage Cabinets. The site selection requirements for outdoor energy storage systems are as follows:

- Within the installation site of the energy storage system or energy storage power station and within a 3m radius around it, there shall be no combustible materials to prevent fire spread hazards. (Exemption clause: Single specimens of trees, shrubs, or cultivated ground cover that do not easily transmit fire, such as green grass, ivy, succulent plants, or similar plants used as ground cover, shall be exempted.)
- It is not recommended to add obstructions on top of the energy storage system. If obstructions must be added in special scenarios, the following conditions must be met:
  - The distance between the obstruction and the top of the energy storage system shall be greater than 3m.
  - The obstruction shall be non-combustible.
  - Meanwhile, in extreme cases, there is a risk of damage to the obstruction, and our company shall not be liable for damage to the obstruction.
- The distance between the energy storage system and residential buildings shall be ≥ 12m, and the distance from personnel-intensive buildings such as schools and hospitals shall be >30.5m. If this safe distance cannot be met, a fire wall shall be built between the energy storage system and the building.
- The safe distance between the energy storage system and buildings shall comply with local fire regulations or standards.
- The energy storage system will be corroded if installed in areas with salt damage or pollution. Do not install the energy storage system in such areas. The energy storage system can be used in the following environments or better ones:
  - Outdoor environments more than 2000m away from the coast; it is not recommended to use the energy storage system within 2000m from the coast (if necessary, confirmation with the dealer or our company's engineers is required).
  - More than 3000m away from heavy pollution sources such as smelters, coal mines, and thermal power plants.
  - More than 2000m away from moderate pollution sources such as chemical industry, rubber, and electroplating.
  - More than 1000m away from light pollution sources such as food, leather, heating boilers, slaughterhouses, centralized garbage dumps, and sewage treatment stations.

4.2 Clearance Requirements

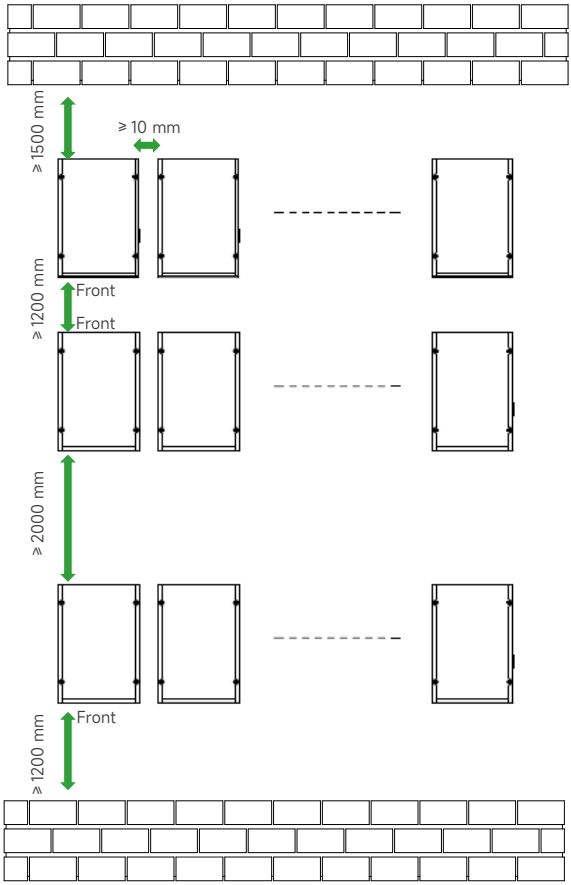

4.3 Foundation Requirements

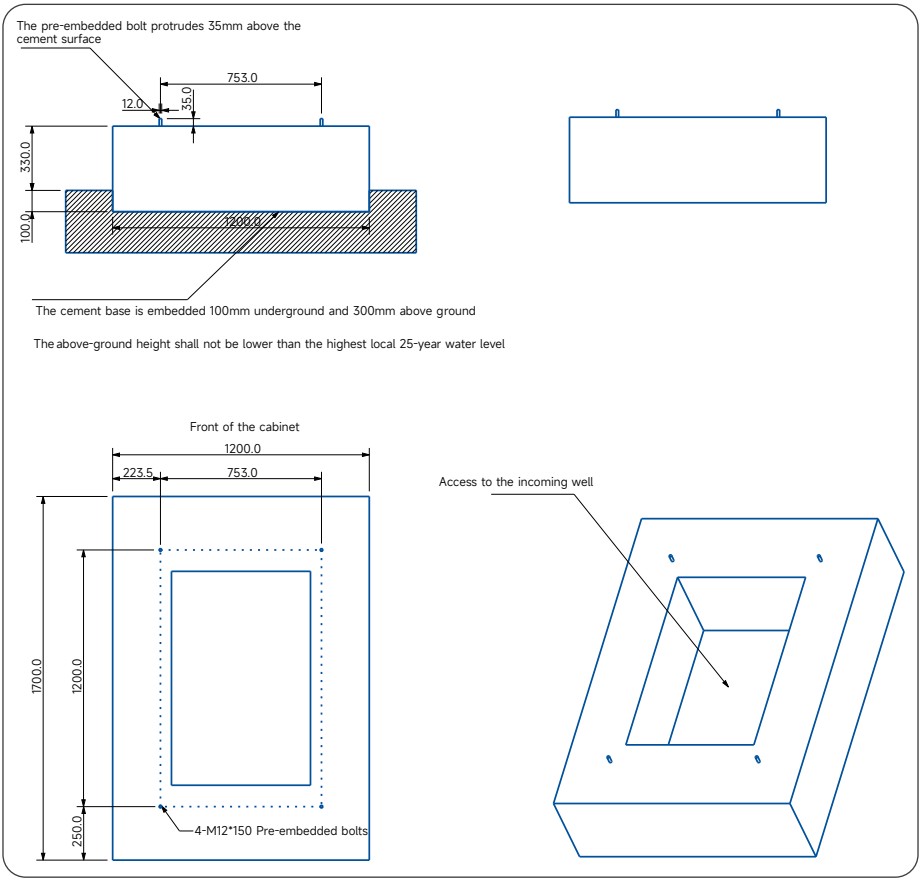

- The energy storage system must be installed on a concrete or other non-combustible surface. The installation plane must be horizontal, firm, and flat, with sufficient load-bearing capacity. Concavities or inclinations are prohibited.
- The equipment foundation shall be configured according to the total weight of the equipment. If the bearing capacity of the foundation does not meet the requirements, rechecking is necessary.
- The bottom of the foundation pit for the equipment foundation must be compacted and filled flat.
- After the equipment foundation is excavated, water immersion and disturbance are strictly prohibited. If water immersion and disturbance occur, further excavation and replacement filling shall be carried out.
- The horizontal error of the contact surface between the equipment foundation and the cabinet body shall be ≤ 3mm.
- The foundation must be higher than the local historical highest water level and at least 300mm above the horizontal ground.

- Drainage facilities shall be constructed in combination with local geology and municipal supporting drainage requirements to ensure no water accumulation at the equipment foundation. The foundation construction shall meet the drainage requirements of the local historical maximum rainfall, and the discharged water shall be treated in accordance with local laws and regulations.
- When constructing the equipment foundation, the cable outlet of the energy storage system shall be considered, and a trench or wire inlet hole shall be reserved.
- The reserved holes in the equipment foundation and the wire inlet holes at the bottom of the equipment shall be sealed.
- For the foundation drawing, please contact our company's product manager. The user must recheck the foundation design parameters of the energy storage system according to the installation environment, ground bearing capacity, geological conditions, and seismic requirements of the project site.
- The foundation design shall consider the installation and operation and maintenance scenarios, and reserve the driving channel and space for forklifts.

4.4 Forklift Requirements

- If using a forklift for rack installation, the forklift's load-bearing capacity should be ≥ 4t.
- Recommended fork length ≥ 1800mm, width 230~300mm, thickness 25mm~80mm.
- Forklift lifting height requirement: Forklift lifting height ≥ local foundation height + 0.2m. For example, if the local foundation height is 0.3m, the forklift lifting height should be ≥ 0.5m.

4.5 Hoisting Requirements

Before hoisting, ensure that the crane and hoisting ropes meet the load-bearing requirements. When installing and dismantling hoisting equipment, do not drag it across the cabinet to prevent scratches.

Lifting Process	Precautions
Before Lifting	The lifting capacity of the crane shall be ≥ 3t, and the working radius shall be ≥ 2m. If the on-site working conditions do not meet the requirements, professional personnel shall be invited for evaluation.
	Personnel engaged in lifting operations shall receive relevant training and be qualified before taking up their posts.
	Lifting tools shall be inspected and be fully equipped before use.
	Ensure that lifting tools are firmly fixed to load-bearing fixtures or walls.
	When used outdoors, it is recommended to lift equipment in sunny and windless weather.
	Proceed with lifting only after confirming that the crane and steel cables meet the requirements.
	All doors of the equipment shall be fully closed and locked.
	Ensure that the connection of steel cables is safe and reliable.
	It is recommended to adopt a lifting sequence from left to right or right to left to ensure the lifting proceeds smoothly.
During Lifting	It is strictly prohibited for unrelated personnel to enter the lifting area, and standing under the crane boom is strictly forbidden.
	Ensure the crane is positioned properly and long-distance lifting is not allowed.
During Lifting	Keep stable, and the diagonal inclination of the cabinet shall be ≤ 5°. Ensure the angle between the two cables is ≤ 90°.
	Lift and lower the equipment gently. When the cabinet falls, it should be slow and steady to avoid impact on internal equipment.
	When the cabinet contacts the base, remove the lifting steel cables only after the base is uniformly stressed.
	Dragging steel wire ropes or lifting tools is prohibited, and equipment collisions must be avoided.
	Subsequent racks can only be hoisted after the first rack has been secured.

5 Mechanical Installation

5.1 Pre-installation Check

Inspect outer packaging before unpacking

- Check if the equipment's outer packaging has visible damages, such as holes, cracks, or other signs of potential internal damage. If there is any abnormal packaging, do not unpack it and contact your dealer as soon as possible.
- Verify the equipment model. If the equipment model does not match, do not unpack it and contact your dealer as soon as possible.

Inspect delivered items after unpacking

- Check that the equipment and accessory packs are complete and without any missing parts.

Inspect cables after unpacking

- After opening the package, check if the fastening components and detachable parts are loose. If they are loose, immediately notify the transporter and the manufacturer.

5.2 Installation Tools

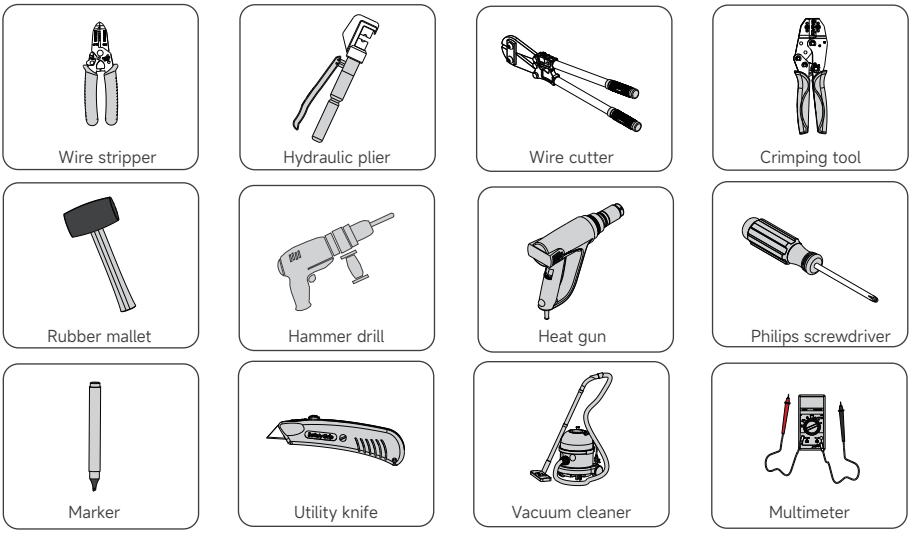

Digonal plier

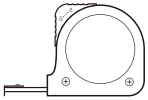
Measuring tape

Torque wrench

Insulated ladder

Crane
(> 3t)

Electric forklift
(> 3t)

Safety helmet

Safety vest

5.3 Packing List

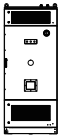
Cabinet

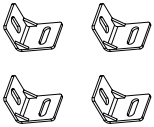
Angle support × 4

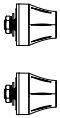
Antenna stick × 2

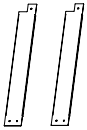
Cover plate × 2

TLK35-8 terminal × 1

TLK70-10 terminal × 4

Key × 2

5.4 Installing the ESS

5.4.1 Unpacking and Acceptance

The unit is 100% tested and inspected prior to shipment from the manufacturing facility. However, damage may still occur during transportation. Before unpacking the rechargeable battery, check the model number and the outer packaging material for damage such as holes and cracks.

Since the height of the cabinet is more than 2 meters, take necessary precautions when disassembling the outer packaging so that you can work at a high place. See the following diagram for disassembly procedures.

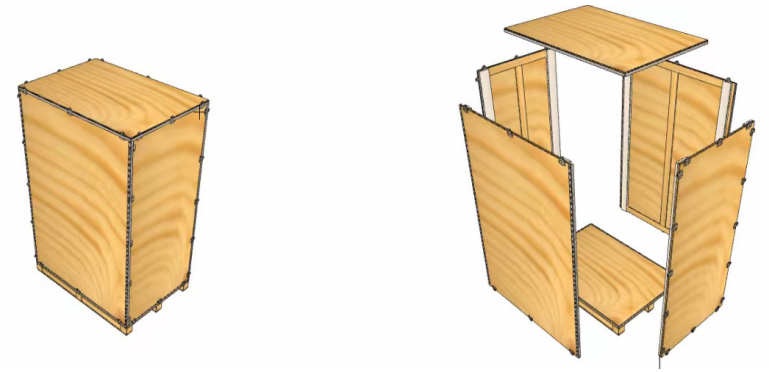

5.4.2 Positioning Plate Operation

Use the positioning plate to drill holes.

5.4.3 Cabinet Handling: Crane Hoisting / Forklift Requirements

Crane Hoisting

If it is crane hoisting operation, M20 lifting rings must be installed first.

Step 1: Apply adhesive to the lifting ring holes on the cabinet.

Step 2: Secure the M20 lifting ring and tighten it with a torque wrench. Torque: 600 N·m.

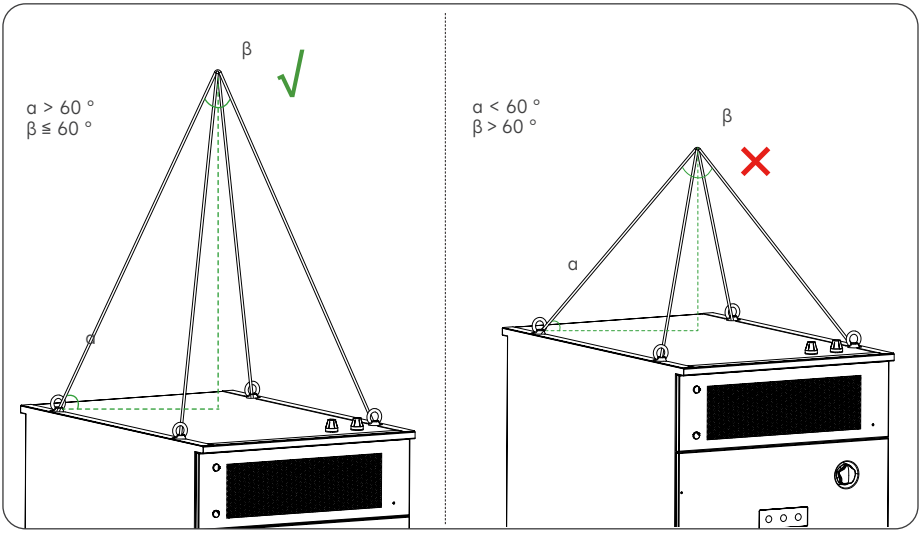

Forklift

Before using a forklift to move the cabinet, ensure that it is securely fixed in place and that there is no risk of it tipping over.

5.4.4 Fixing the Energy Storage System

Step 1: Place the positioning plate on the cement base.

Step 2: Drill holes with a hammer drill.

Step 3: Secure the angle support to the cabinet, and fix the expansion bolts using a torque wrench.

Step 4: Remove the M6 screws pre-installeded on the cabinet next to the angle support position, then attach the cover plate, and secure it with the M6 screws.

6 Electrical Connections

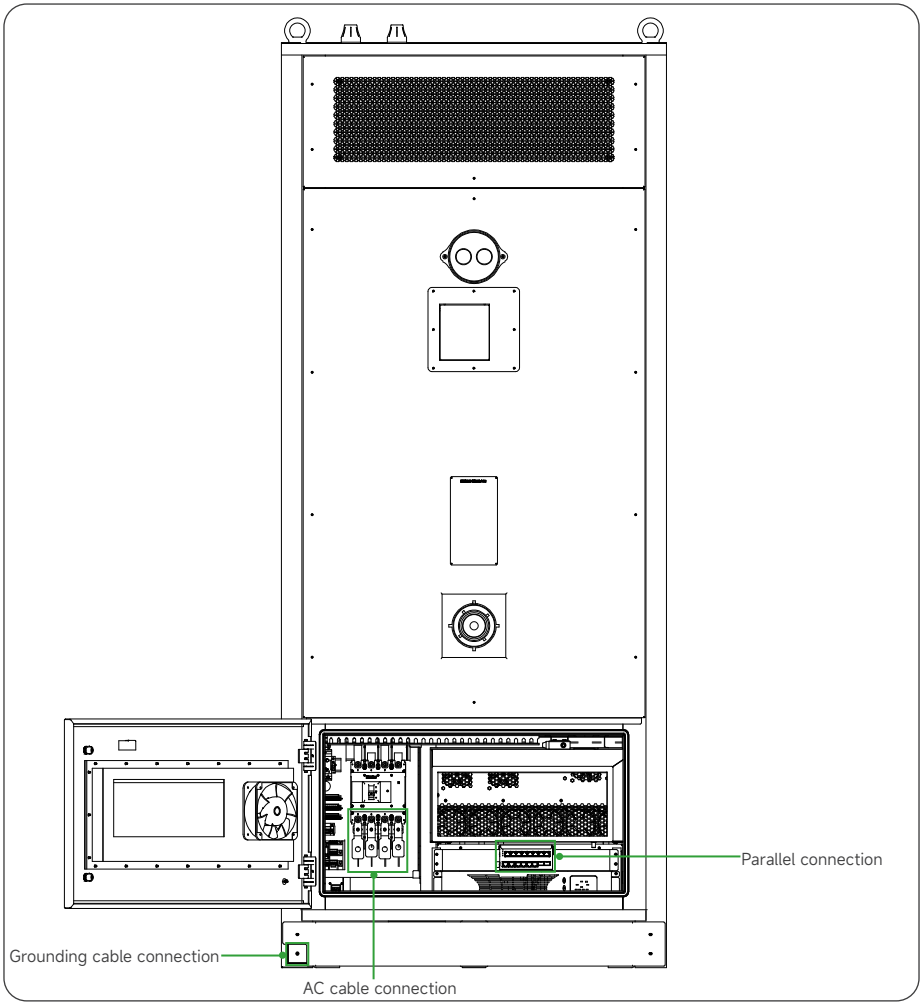

6.1 Grounding Cable Connection

Protective grounding cable must be connected.

6.2 AC Cable Connection

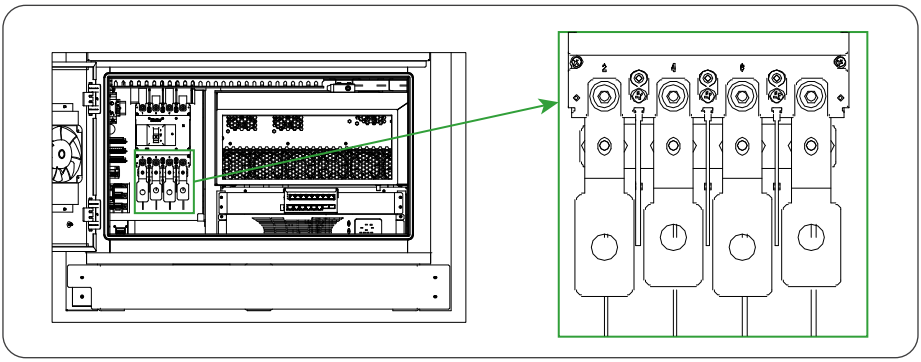

6.3 Parallel Connection

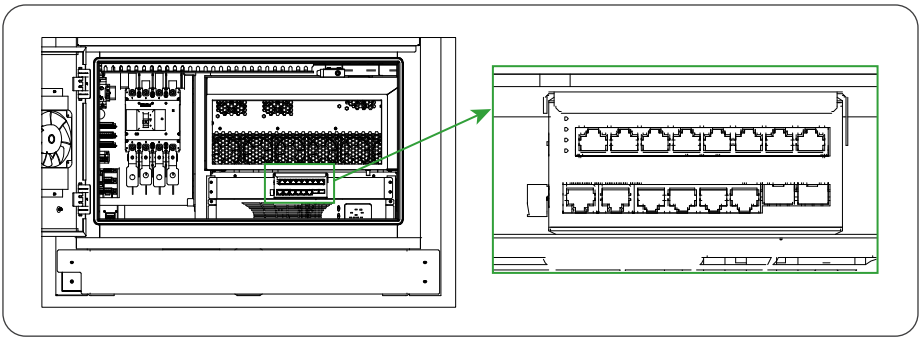

7 ESS System Commissioning

7.1 Checking before Power-On

Cabinet Inspection

- The installation is consistent with the design drawings.
- The cabinet is horizontal, and all cabinet doors can be opened normally.
- The cabinet surface is free of cracks, dents, and scratches. If there is paint chipping, perform paint touch-up.
- Correctly ground the cabinet according to the requirements of the power distribution system. The quantity and location of accessory installation meet the design requirements.
- The labels are correct, clear, and complete.

Internal Cabinet Inspection

- The auxiliary power circuit breaker is in the open position.
- The isolating switch is in the open position.
- The cable installation bolts are tightened, and the cables are free from loosening when pulled. The cable through-holes have been sealed.
- All components are free from external damage.
- Remove all foreign objects inside the cabinet, such as tools and remaining installation materials.
- The electricity meter has no cracks, dents, or damage on its appearance, and the buttons function normally.
- The grounding conductor is reliably connected to the cabinet's grounding terminal.

7.2 Powering On the ESS

Step 1: Close the molded case circuit breaker QF1.

Step 2: Turn on the UPS, press and hold the ON button for more than 2 seconds, then briefly press FUNC, and check to confirm that OUTPUT has 220V.

Step 3: Close the miniature circuit breakers APS-12V , HVB , APS-24V in sequence.

Step 4: Turn on the BMS. First, ensure the ON button is lit with a green light. Then, rotate the circuit breaker clockwise until the indicator is ON. Hearing the contactor closing sound from the BMS indicates successful power-on.

Step 5: Close the miniature circuit breakers LCU, UPS , and Light in sequence. At this point, the entire system has successfully powered on.

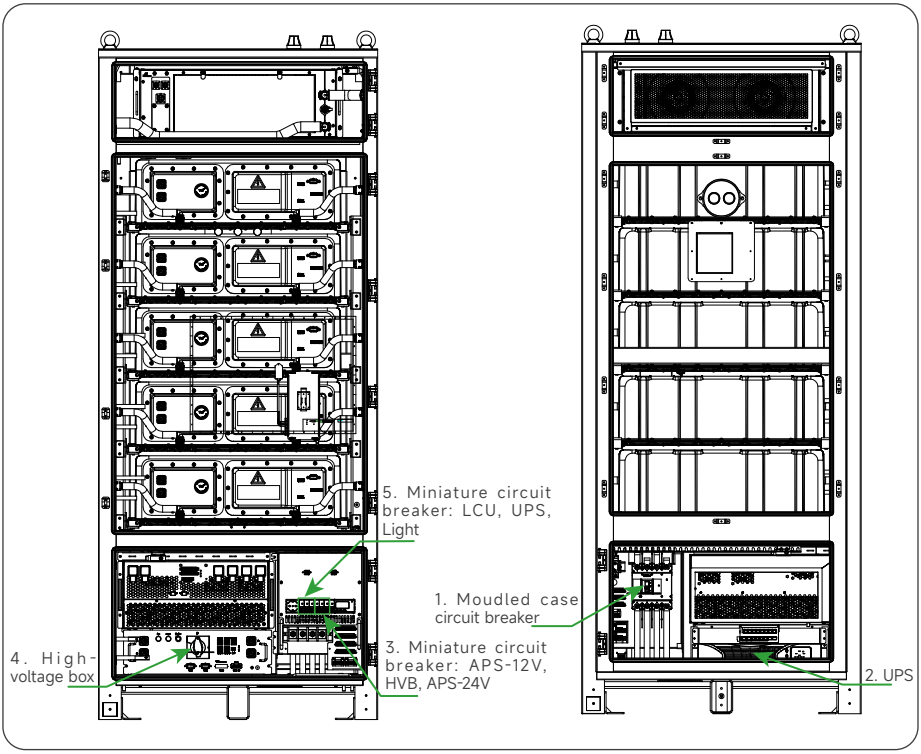

7.3 Powering Off the ESS

Step 1: Issue a shutdown command: On the S interface, click "System Management", click "Strategy Management", click "Shutdown Command", and issue a shutdown command to the PCS.

Step 2: Disconnect the miniature circuit breakers LCU, UPS, Light in sequence.

Step 3: Disconnect the molded case circuit breaker QF1.

Step 4: Press the ON/OFF key of the high-voltage box and rotate the circuit breaker of the high-voltage box counterclockwise.

Step 5: Disconnect the miniature circuit breakers APS-12V, HVB, APS-24V, SEF in sequence.

Step 6: Press and hold the OFF key on the UPS panel for more than 5 seconds to turn it off.

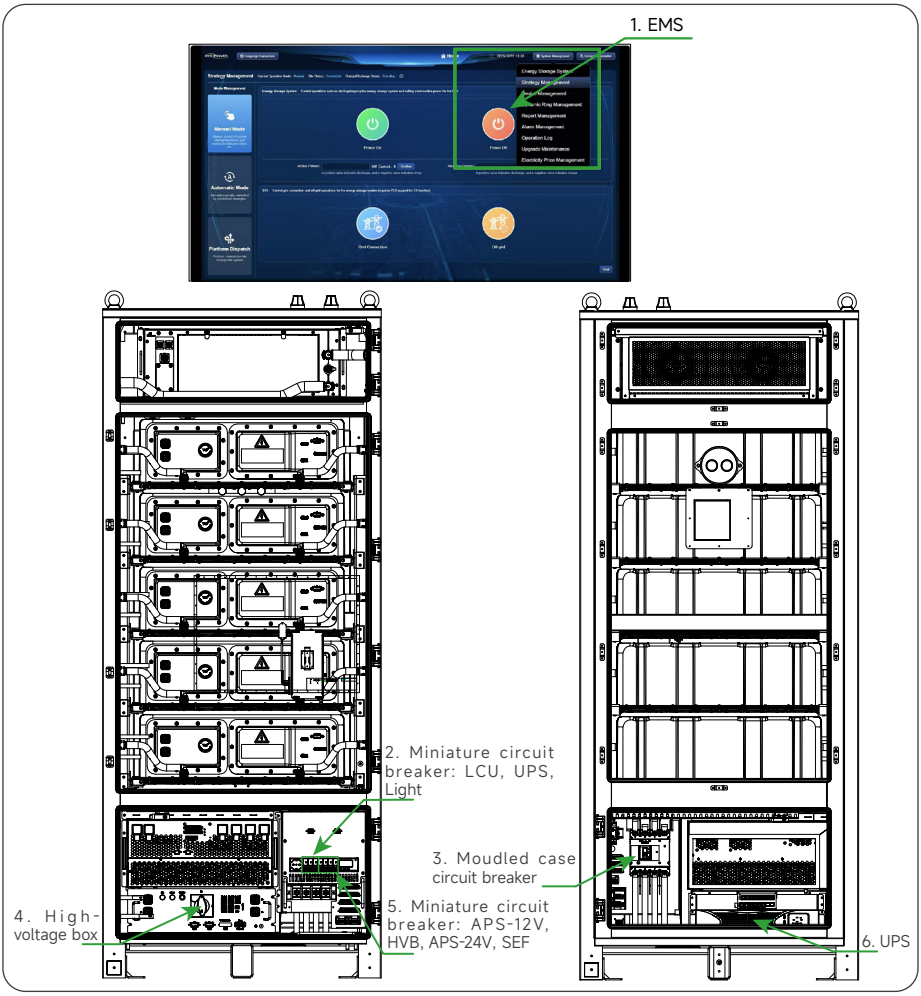

8 Equipment Operation Control

The control of the energy storage system is mainly carried out through the EMS local system, which mainly includes the following functions:

Site Management-EMS: Energy storage system, grid load, energy management, dynamic environment management, historical records, alarm management, energy consumption statistics, battery cluster management, single cell information, etc.

8.1 Login to The Energy Management System

Method 1:

Access the machine EMS IP address and , log in using the login name and password.

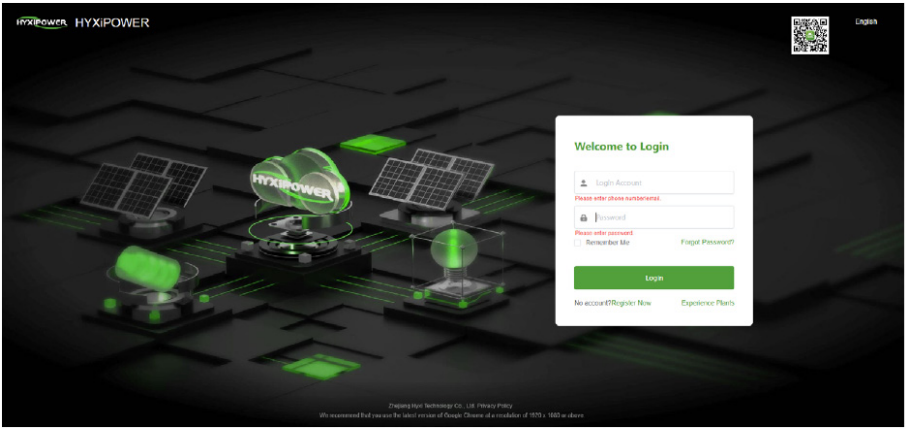

Method 2:

Scan the QR code through the APP to add industrial and commercial energy storage cabinet equipment. After scanning and adding, register on the HYXiPOWER Smart Energy Platform.

Log in to the official website: https://www.hyxicloud.com/#/login, enter your username and password, go to the device monitoring page, find the corresponding EMS, and click to visit.

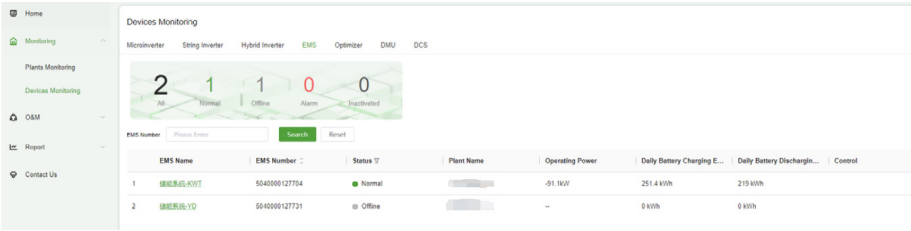

8.2 EMS System Main Interface

After successful login, you will enter the main interface of the system, which is divided into three areas. The left side of the interface shows the basic information of the site and the status of peripherals. The middle is the main display area, which shows the electrical topology of the entire site . The bottom shows the operation time of the entire power station, the cumulative charge and discharge time, and the cumulative charge and discharge efficiency. The right side of the interface shows the charge and discharge status of a single cabinet, as well as real-time power, alarm pop-up boxes , etc.

In the upper right corner, you can enter the system to configure policies, query alarm history records, and configure the overall system.

9 Troubleshooting

Fault	Possible causes	Measures
The system is not functioning properly.	• The secondary circuit of the system is not powered. • The circuit breaker of some equipment is not closed.	• Check if the monitoring power supply indicator light is on. • Refer to the monitoring electrical diagram to see if there is any equipment circuit breaker that is not closed. • If it still does not work properly, please contact the manufacturer for after-sales service.
System, single pressure shutdown protection	• System, single cell voltage is higher than the protection value. • The battery sampling harness is broken or the sampling plugin connection is unreliable. • BMU working abnormally.	• Reinstall the BMU sampler power supply plug, check the system battery voltage, if the battery is damaged Please replace damaged batteries.
System, single unit lack pressure shutdown protection	• System, single cell voltage is lower than protection value. • Battery sampling harness short wire or sampling plugin connection is unreliable.	Re-plug BMU sampler power supply plug, check the system battery voltage, if the battery is damaged, please replace damaged batteries.
Charge and discharge over temperature stop machine protection	• The system temperature is higher than the protection value. • The temperature sampling harness is broken or the sampling plugin connection is unreliable. • BMU is not working properly.	• Re-plug BMU sampler power supply plug, check whether the air conditioner is operating normally. If it is abnormal, please contact the manufacturer's after-sales service.
Charge and discharge stop due to under temperature machine protection	• The system temperature is lower than the protection value. • The temperature sampling harness is broken or the sampling plugin connection is unreliable. • BMU is not working properly.	
Charge and discharge overcurrent stop machine protection	The system charge and discharge current is higher than the protection value.	• Check if the PCS is working properly. Please contact the manufacturer for after-sales service.
System insulation failure	• Insulation detection failure • System leakage	• Use remote background to shut down PCS, BMS Electrical appliances and contact the manufacturer's after-sales service.

Fault	Possible causes	Measures
BCU and BMU communication failure	• BMS system is not powered. • The corresponding CAN communication cable is loose	• Check whether the BMS system is powered normally. View the corresponding BCU and BMU communication plug-ins, check if it is loose or the wiring harness is damaged.
BCU and BAU communication failure		
BMS and PCS communication failure	• BMS system is not powered. • PCS system is not powered. • The corresponding communication network cable is loose.	• Check whether the power supply of the entire energy storage system is normal. • Check whether the corresponding BAU and PCS communication plug-ins are loose. • And whether the wiring harness is damaged.
Air conditioner and BMS communication failure	• The energy storage system is not powered on. • The corresponding communication cable is loose.	• Check whether the entire energy storage system is powered normally. • And whether the wiring harness is damaged.
SOC display abnormal	• SOC not calibrated • SOC error accumulation	• Perform a complete charge and discharge cycle on the system.

10 Emergency Handling

When the following dangerous accidents (including but not limited to those listed below) occur at the scene, please ensure the personal safety of on-site personnel first and contact our company's service engineers promptly.

When the battery falls or is subjected to a strong impact:

- If there are obvious peculiar smells, damage, smoke, fire, etc., immediately evacuate personnel, report to the police in a timely manner, contact professionals, and let professionals use fire-fighting facilities to extinguish the fire and perform other treatments under the condition of ensuring safety.
- If there is no obvious deformation or damage in appearance and no obvious peculiar smell, smoke, or fire, operate under the premise of ensuring safety:
    - Warehouse: Evacuate personnel, let professionals use mechanical tools to transfer the battery to an open and safe place, and contact our company's service engineers. Let the battery stand for 1 hour and handle it after monitoring that the battery temperature is within the range of room temperature ±10° C.
    - At the energy storage system site: Evacuate personnel, close the energy storage system doors, and have professionals use mechanical tools to move the batteries to an open and safe location. Contact our service engineer and allow the system to stand for 1 hour before proceeding.

When floods occur:

- Under the premise of ensuring personal safety, power off the system.
- If any part of the battery is submerged in water, do not touch the battery to avoid electric shock.
- Do not use the battery that has been flooded, and contact the battery recycling company for scrapping treatment.

When a fire occurs:

- If a fire occurs, power off the system under the condition of ensuring safety.
- Use carbon dioxide, FM-200 or ABC dry powder fire extinguishers for fire fighting.
- Firefighters need to avoid contact with high-voltage components during fire fighting, otherwise it may lead to electric shock risk.
- Excessively high battery temperature will cause battery deformation, damage and electrolyte overflow, releasing toxic gases. Respiratory protective equipment should be worn, and do not approach to avoid skin irritation and chemical burns.

When the audible and visual alarm is activated:

- When the device warning light flashes or buzzes:
  - » Prohibit approaching
  - » Prohibit opening the door
  - » Move away immediately
  - » Cut off the power remotely under the condition of ensuring personal safety

When exhaust is activated:

- On-site Personal Protection: Operators are prohibited from facing the exhaust port directly.
- Post-disaster product maintenance: Contact our company's service engineers for evaluation.

When coolant leak occurs:

- If the system is in operation, power off the system under the condition of ensuring safety.
- Investigate possible leakage points of the system, focusing on the connections of liquid cooling pipelines, bends of movable pipe sections, plug-in positions of two-way stop valves, etc.
- According to the leakage location, replace the sub-component where the leakage occurs (PACK, PCS liquid cooling unit or liquid cooling pipeline).
- Check whether the coolant infiltrates into RCM. If coolant infiltrates into RCM, replace RCM in time.
- After troubleshooting, clean the inside of the system, power it on again and check whether the system is normal. If there is any abnormality, please contact our company's service engineers for handling in time.

When extinguishing agent sprays or fire occurs:

(Recommendations for on-site maintenance personnel)

- In the event of a fire, evacuate the building or equipment area and press the fire alarm bell. Immediately call the fire department to notify professional firefighters and provide them with relevant product information, including but not limited to: battery pack type, energy storage system capacity, and battery pack location distribution.
- Under no circumstances shall entry into the burning building or equipment area be attempted again, and opening the energy storage system door is prohibited. Isolate and guard the site, and keep unauthorized personnel away.
- After calling the fire emergency number, remotely power off the system under the condition of ensuring personal safety.
- When professional firefighters arrive, provide them with relevant product information, including but not limited to battery pack type, energy storage system capacity, battery pack location distribution, user manual, etc.
- After professional firefighters confirm that the fire is extinguished, handle it by professionals in accordance with local regulations, and opening the energy storage system door without authorization is prohibited
- Post-disaster product maintenance: Contact our company's service engineers for evaluation.

(Recommendations for Professional Firefighters)

- For product information, please refer to the information provided by the operation and maintenance personnel, including but not limited to battery pack type, energy storage system capacity, battery pack location distribution, user manual, etc.
- Do not open the energy storage system door until the internal safety of the energy storage system is ensured.
- Fire fighting operations shall comply with local fire regulations.
- In case of fire, prevent the fire from spreading to the energy storage cabinets around the burning cabinet.

11 Appendix

11.1 Technical Parameter

Product Model	HYX-EL261P2-EU/AU
Battery Rating	
Cell Type	LFP / 314 Ah
Battery Configuration	1P52S
Rated Voltage [V]	832
Battery Voltage Range [V]	728 - 936
Rated Capacity [kWh]	261
AC Side (on-grid)	
Rated AC Power [kW]	125
Rated AC Voltage [V]	3L/N/PE, 230/400 V
Rated AC Current [A]	180
Nominal Frequency [Hz]	50 / 60
Frequency Range	50 / 60 Hz ± 2.5 Hz
Max. THD of Current	< 3 % (Nominal power)
DC Component	< 0.5 % (Nominal power)
Power Factor	0.99 leading ~ 0.99 lagging
AC Side (off-grid)	
Rated AC Voltage	3L/N/PE, 230/400 V
Rated AC Current [A]	180
Nominal Frequency [Hz]	50 / 60
Max.THD of Voltage	< 3 % (Linear load)
Unbalance Load Capacity	100%
General Data	
Dimension (W*H*D) [mm]	1000×2402×1467 mm
Weight [kg]	2620
Protection Degree	IP55
Anti-corrosion Degree	C4 (Default) C5 (Optional)
Operating Humidity Range	0 ~ 100%
Operating Temperature Range	-30 ~ 55° C (> 45 °C derating)
Max. Operating Altitude [m]	3000
Cooling Method	Liquid cooling
Noise	≤ 70 dB
Fire Suppression System	Flammable gas detector, Smoke detector, Heat detector, Alarm sounder, Smoke exhaust fan, Aersol
Communication Interface	Ethernet / Wi-Fi / 4G
Communication Protocol	Modbus TCP
Standard	IEC 62619, IEC60730, IEC 63056, IEC 62477, IEC 61000, UN 38.3

11.2 How to Repaint the Cabinet

Prerequisites

- **Prohibition in adverse weather**: Under unshielded outdoor conditions, repainting is strictly forbidden during rain, snow, strong winds, sandstorms, or other severe weather.
- **Repaint preparation**: Prepare the required paint according to the color chart provided at the time of delivery.

Repainting Instructions

The exterior of the equipment shall be kept intact. If paint peeling occurs, repainting must be performed immediately.

Inspect the extent of paint damage on the equipment, then prepare corresponding tools and materials. The quantity of materials shall be evaluated on-site based on the repainting requirements.

Extent of Paint Damage	Tools and Materials	Operation Steps
Shallow scratches (steel substrate not exposed); Non-washable stains or rust	• (For small-area touch-ups) Spray paint or paint, paintbrushes • (For large-area touch-ups) Fine sandpaper, anhydrous ethanol, cotton cloths, spray gun	Perform Steps 1 + 2 + 4 + 5
Deep scratches (primer damaged, steel substrate exposed)	• (For small-area touch-ups) Spray paint or paint, zinc-rich primer, paintbrushes • (For large-area touch-ups) Fine sandpaper, anhydrous ethanol, cotton cloths, spray gun	Perform Steps 1 + 2 + 3 + 4 + 5
Damaged LOGO or patterns	For damaged logos and patterns, please provide the logo size and color code. Find a local advertising spray painting supplier to develop a repair plan based on the logo size, color, and extent of damage, and then carry out the repair work.	
Impact dents	• For impact area ≤ 100mm^2 and depth < 3mm: Use unsaturated polyester resin putty (Poly-Putty base, also known as "atomic ash") to fill the dent, then follow the touch-up procedure for deep scratches. • For impact area > 100mm^2 or depth > 3mm: Find local suppliers to provide a separate repair plan based on the actual situation.	

NOTICE

- For a small number of scratches, small-area stains, or rust, spray paint or brush painting is recommended.
- For a large number of scratches, large-area stains, or rust, a paint spray gun must be used for painting.
- The paint film shall be as thin and uniform as possible; no droplet-shaped film is allowed, and the surface shall be kept smooth.
- After the surface has been repainted for about 30 minutes, further work can be carried out.

Operation Steps

Step 1: Lightly sand the damaged area with fine sandpaper to remove dirt or rust.

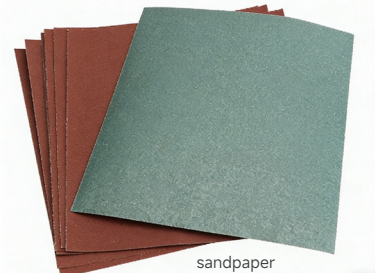

Step 2: Moisten a cotton cloth with anhydrous ethanol, wipe the sanded or to-be-repaired area to remove surface dirt and dust, then dry it with a clean cotton cloth.

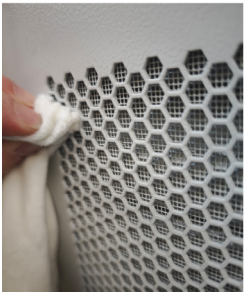

Step 3: Repaint the damaged coating area with zinc-rich primer using a paintbrush or spray gun.

NOTICE

- If the substrate is exposed in the area to be repaired, an epoxy zinc-rich primer must be applied first. Once the paint is dry and the substrate is no longer exposed, an acrylic topcoat can be applied.
- Select either epoxy zinc-rich primer or an acrylic topcoat matching the color of the equipment's surface coating.

Step 4: Based on the extent of paint damage, select one of the following methods (spray paint, brush painting, or spray gun application) to evenly touch up the damaged coating area until no traces of damage are visible.

NOTICE

- Ensure the brushed paint film is as thin and uniform as possible; no droplet-shaped film is allowed, and the surface shall be kept smooth.
- For equipment with patterns of different colors: Before touch-up painting, cover the areas of other colors (excluding the damaged paint) with tape and white paper to prevent contamination during the touch-up process.

Step 5: After brush painting, leave the area to stand for approximately 30 minutes, then check if the touch-up area meets the requirements.

NOTICE

- The color of the touch-up area shall match that of the surrounding area. Use a colorimeter to measure the color difference, which shall satisfy $\Delta E \leqslant 3$. If a colorimeter is unavailable, ensure there are no obvious edges between the retouched area and the surrounding area. The coating shall also be free of bulges, scratches, peeling, or cracks.
- For spray painting: It is recommended to apply 3 coats first, then check if the requirements are met. If not, repeat the spraying process until the requirements are satisfied.

Reference for Paint Supply Resources

Paint Requirement Item	Specific Requirements
Primer thickness	60 μm
Intermediate coat thickness	120 μm
Topcoat thickness	60 μm
Primer type	Epoxy zinc-rich paint
Intermediate coat type	Zinc-rich paint
Topcoat color code	RAL 9003 spray paint

11.3 Contact Information

If you have any questions about this product, please contact us.

In order to provide you with faster and better after-sales service, we need your assistance in providing the following information.

- Equipment model : _____
- Serial number of the device: _____
- Fault code / name: _____
- A brief description of the fault phenomenon: _____

  _____

  _____

  _____

Version: UM_HYX-EL261P2-EU/AU_V1.1-202609_EN
The manual is subject to change without notice while the product is being improved.

Zhejiang Hyxi Technology Co., Ltd.

Building 1, No. 57 Jiang'er Road, Changhe Street, Binjiang District,
Hangzhou, Zhejiang Province, China
www.hyxipower.com
support@hyxipower.com